Eastern Municipal Water District
Water System Construction

Revision 3/26/2019

Water Standard Drawings:

Dwg No.	Description	Rev. No.	Rev. Date
A-492	DELETED - Valve Cap & Riser Detail		06/29/15
A-530	Anchor Block (Vertical Bend Only)		
A-540	Emergency Shower & Eyewash	2	04/29/10
B-255	Installation of Vertical Gate Valves (Steel Pipe 14" & Larger; AC, PVC & DI Pipe 4" & Larger)	2	07/29/97
B-271	Saddle Outlets - 3/4" to 36"	2	10/15/03
B-286B	Trench Backfill	6	09/25/03
B-288	Steel Flanges, 4" to 54"	1	05/06/97
B-304	Butt Strap Details	1	01/01/98
B-342	1 1/2" Meter Installation	7	09/07/16
B-342A	1 1/2" Copper Service Connection	7	01/17/17
B-344	2" Meter Installation	7	01/17/17
B-344A	2" Copper Service Connection	5	09/07/16
B-351	6" x 1 - 2 1/2" Blow Off Installation (Steel Pipe)	3	10/14/05
B-356	6" x 1 - 2 1/2" & 1 - 4" Fire Hydrant Installation (Steel Pipe)	3	10/02/06
B-357	6" x 1 - 2 1/2" Blow-off Installation for AC, PVC & DI Pipe	3	03/06/03
B-362	6" x 1 - 2 1/2" & 1 - 4" Fire Hydrant Installation for AC, PVC & DI Pipe	3	10/02/06
B-367	2" Air Valve Installation	3	07/22/13
B-387	6" x 1 - 2 1/2" & 1 - 4" Fire Hydrant Installation (City of Hemet - Steel Pipe)	2	05/18/00
B-388	6" x 1 - 2 1/2" & 1 - 4" Fire Hydrant Installation (City of Hemet - AC, PVC & DI Pipe)	2	05/18/03
B-407	Thrust Block Installation for Hub-End Pipe	4	02/16/73
B-408	Water Pipe Installation ACP, PVC and DIP	4	12/08/17
B-414	Water Pipeline End Plug Installation for AC Pipe	1	03/01/85
B-516	6" x 2 - 2 1/2" x 1 - 4" Fire Hydrant Installation (Steel Pipe)	3	10/02/06
B-517	6" x 2 - 2 1/2" x 1 - 4" Fire Hydrant Installation for AC, PVC & DI Pipe	3	10/02/06
B-533	Telemetry Wire & Terminal	2	08/19/05
B-561	4" x 1 - 2 1/2" Blow-Off Temporary End Installation (Steel Pipe)	3	05/18/00
B-563	Steel Pipeline - Pipe Pad or Coupling for Cast Iron Fittings	1	11/18/98
B-566	6" x 2 - 2 1/2" x 1 - 4" Fire Hydrant Installation (City of Hemet, AC, PVC & DI Pipe)	2	05/17/00
B-567	6" x 2 - 2 1/2" x 1 - 4" Fire Hydrant Installation (City of Hemet - Steel Pipe)	2	05/17/00
B-568	6" x 1 - 2 1/2" Blow Off Temporary End Installation for AC, PVC & DI Pipe	4	03/22/11
B-575	Steel Pipe Casing Water Pipeline	4	04/14/10

Eastern Municipal Water District
Water System Construction

Dwg No.	Description	Rev. No.	Rev. Date
B-577	Installation of Butterfly Valves	1	10/01/97
B-590	5/8" Meter Service Connection	15	01/17/17
B-590A	1" Copper Tubing Service Connection	12	01/17/17
B-591	1" Meter Installation	14	08/14/17
B-591A	DELETED - 1" Meter Service Connection, 1" Copper Tubing	7	01/13/16
B-597A	Reduced Pressure Backflow Preventer Assy for 3/4" - 2"	1	03/05/14
B-597B	Reduced Pressure Backflow Preventer Assy for 2 1/2" - 3"	2	01/13/16
B-597C	Reduced Pressure Backflow Preventer Assy for 4" - 10"	1	03/05/14
B-598	1" Air Valve Installation	4	07/22/13
B-633	3" Meter Installation	4	05/27/15
B-634	4" Meter Installation	3	06/29/15
B-635	6" Meter Installation	3	06/29/15
B-636	8" Meter Installation	3	06/29/15
B-638	Steel Cylinder Pipe- Field Joint Details Welded & Bonded Rubber Gasket	1	01/15/99
B-645	6" x 1 - 2 1/2" & 1 - 4" Fire Hydrant Installation (City of San Jacinto, AC, PVC & DI Pipe)	2	03/07/00
B-650	6" x 2 - 2 1/2" x 1 - 4" Fire Hydrant Installation (City of San Jacinto, AC, PVC & DI Pipe)	2	05/17/00
B-651	6" x 2 1/2" x 1 - 4" Fire Hydrant Installation (City of San Jacinto, Steel Pipe)	3	05/17/00
B-653	6" x 1 - 4" Blow-Off Installation - Saddle Tangent Outlet - Steel Pipe	2	04/17/00
B-654	10” x 12” Detector Meter with 6” Compound Bypass	1	09/08/94
B-656	Locator Wire Installation	3	05/04/99
B-657	4",6",8",10", or 12" Double Check Detector Assembly Reduced Pressure Detector Assembly	7	03/26/19
B-658	Service Connections 1" through 4" on Water Appurtenance Lateral or Watermain 16" or Larger	3	09/22/06
B-659	Air Test Details		
B-660	Test Stations: Insulated Joint and Insulated Joint at Valve	4	12/18/07
B-661	Thermite Weld Details	2	12/18/07
B-662	Test Stations: Line Current, Basic & Pipe with Casing	3	12/18/07
B-663	Standard Restraint Tee, Dead End, Bend for PVC C-900 & C-905	3	03/06/03
B-665	Guard and Marker Posts	1	08/01/97
B-666	Formed Sealant Groove Detail and Typical Crack Repair	2	03/01/12
B-668	Valve Cap & Riser Detail		06/01/15
B-932	4" & 6" Pressure Regulator above Ground Installation		
B-933	8” Pressure Regulator above Ground Installation		
B-934	Recessed Trench Plate Detail	1	08/25/05
B-935	Potable Water Sample Station	2	10/31/13

Eastern Municipal Water District
Water System Construction

Dwg No.	Description	Rev. No.	Rev. Date
B-965	1" Residential Meter Service Connection 1" Copper Tubing	3	05/01/12
B-966	Double Check Backflow Preventer Assy for sizes 3/4" - 2"		
B-967	Double Check Backflow Preventer Assy for sizes 2 1/2" - 3"		
B-968	Double Check Backflow Preventer Assy for sizes 4" - 10"		
B-976	Read Hole For Meter Vaults - Relacing A-496		
B-977	Typical Steel Tank Circumferential Stairway (sheet 1 of 2)	1	12/18/12
B-978	Typical Steel Tank Circumferential Stairway (sheet 2 of 2)		
B-979	Steel Tank Roof Access Platform and Hatch	1	12/18/12
B-984	Steel Tank Roof Hatch		
B-987	EMWD Facility Monument Sign	1	05/27/15
B-993	4" & Larger Service Connection		05/27/15
B-994	Meter Cage - Flange Mount		01/17/17

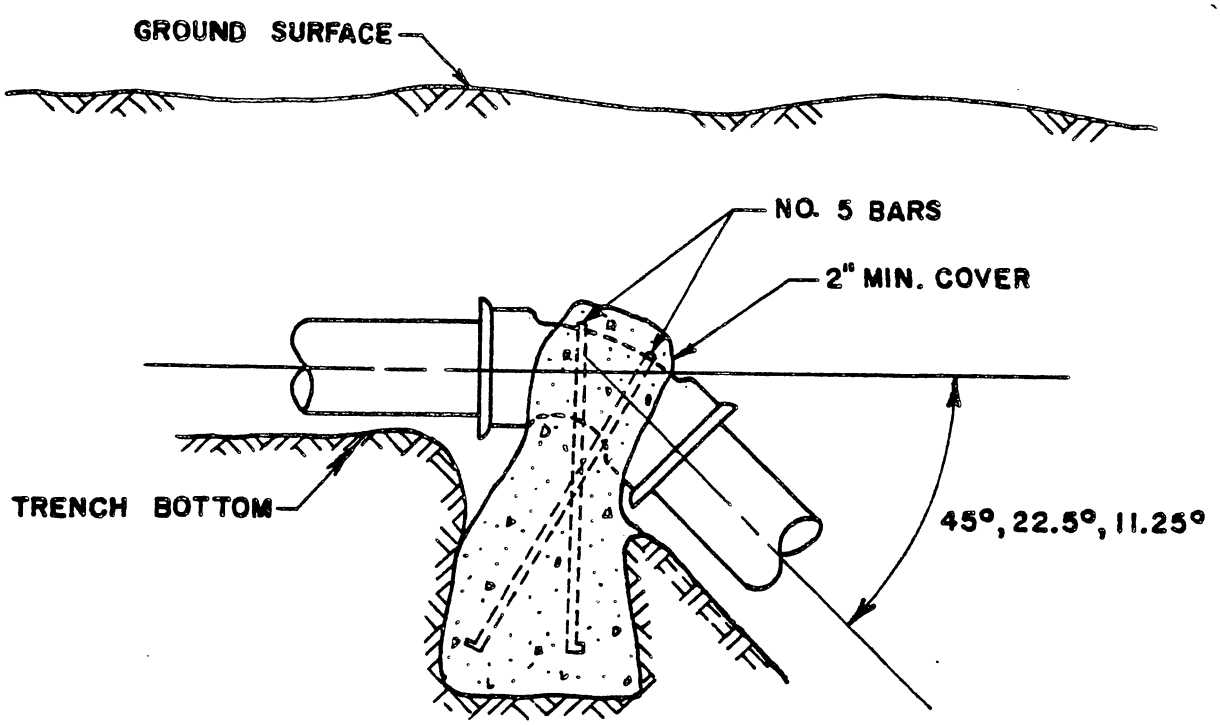

PIPE SIZE	CUBIC FT. OF CONCRETE					
	CLASS 150 TEST PRESS. 225 psi			CLASS 200 TEST PRESS. 300 psi		
	45°	22.5°	11.25°	45°	22.5°	11.25°
4	15	8	4	20	10	5
6	33	17	9	44	22	11
8	58	30	15	77	40	20
12	—	—	34	—	—	45

NOTES:

1. — INDICATES ANCHOR BLOCK MUST BE DESIGNED FOR EACH INDIVIDUAL CASE.

REVISIONS	SCALE	INITIAL	DATE
	DESIGNED	[illegible]	7/83
	DRAWN	B.R.H.	7/83
	CHECKED	[illegible]	8/83
	RECOMMENDED	[illegible]	
	APPROVED	[illegible]	
	DATE	CHIEF ENG.	

EASTERN MUNICIPAL WATER DISTRICT
RIVERSIDE COUNTY, CALIFORNIA

STANDARD DRAWING
ANCHOR BLOCK
(VERTICAL BEND ONLY)

A-530

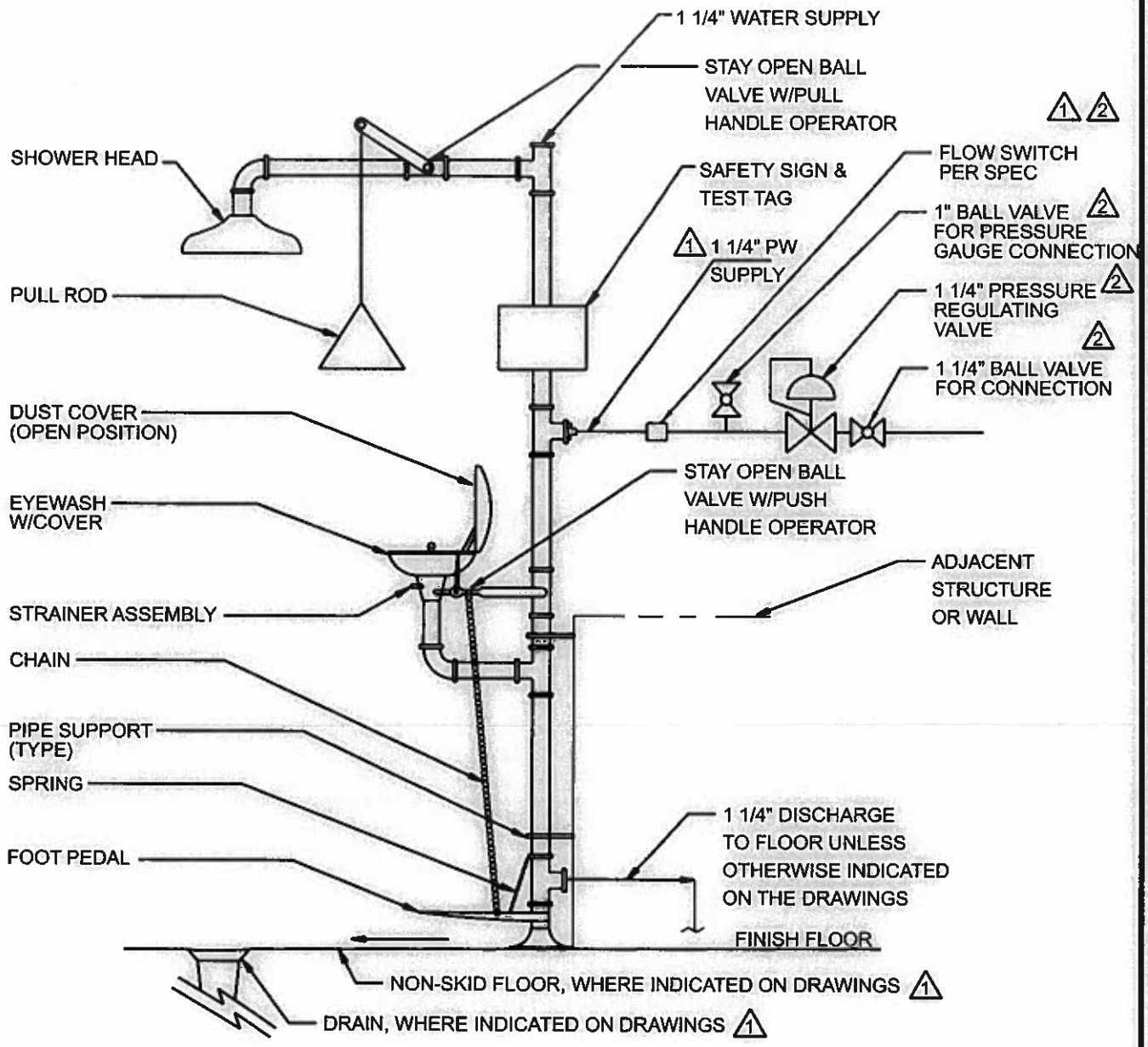

NOTES: 1. INSTALL DIELECTRIC UNION BETWEEN DISSIMILAR METALS. 1 2
FOR MFR, MATERIALS, MODEL SEE SPEC, SECTION E15430.
2. INSULATE EMERGENCY SHOWER & EYEWASH UNITS LOCATED OUTSIDE PER SPEC.
3. SUPPORT PIPING FROM ADJACENT WALL OR PROVIDE APPROVED FREE-STANDING PIPE SUPPORTS.

REVISIONS	INITIAL	APP'D	DATE	NO SCALE	INITIAL	DATE
1 REVISED	RE	JM	6/13/07	DESIGNED		
2 REVISED	RE	SMM	4/28/10	DRAWN	R.E.	5/2/2007
				CHECKED		
				RECOMMENDED		
				APPROVED		
				DATE	04/28/2010	

EASTERN MUNICIPAL WATER DISTRICT
RIVERSIDE COUNTY . CALIFORNIA

EMERGENCY SHOWER & EYEWASH

A-540

2

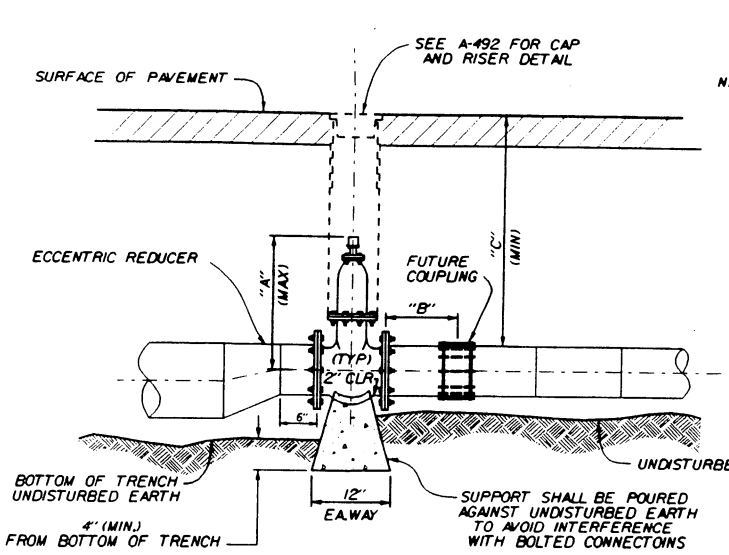

IN-LINE VALVE INSTALLATION

PAVED STREET
(PIPE COATING NOT SHOWN)

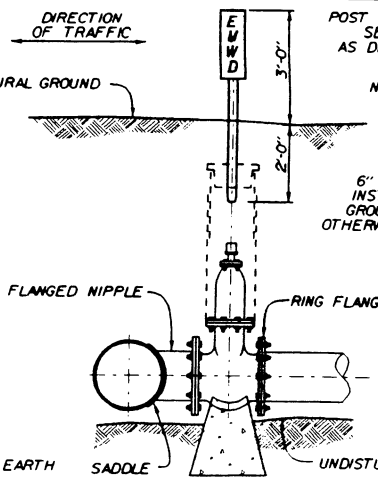

SADDLE OUTLET INSTALLATION

UNIMPROVED ROADWAY

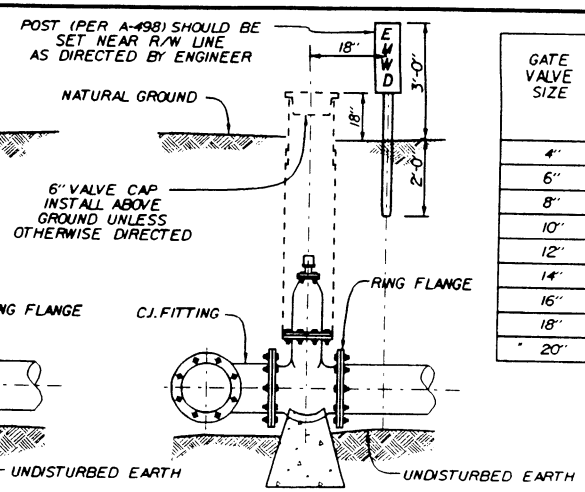

C.J. FITTING INSTALLATION

OPEN FIELD

GATE VALVE SIZE	TABULATED DIMENSIONS		
	DIMENSIONS		
	VALVE HEIGHT "A"	COUPLING NIPPLE "B"	ABS. MIN. COVER "C"
4"	19"	1'-6"	1'-7"
6"	23"	1'-6"	1'-9"
8"	28"	1'-6"	2'-0"
10"	31"	1'-6"	2'-4"
12"	36"	2'-0"	2'-8"
14"	41"	2'-0"	3'-0"
16"	47"	2'-0"	3'-5"
18"	51"	2'-0"	3'-8"
20"	56"	2'-0"	3'-11"

STEEL PIPELINE INSTALLATION - 14" DIAMETER AND LARGER

REFER TO DWG. B-563 FOR 12" DIAMETER AND SMALLER

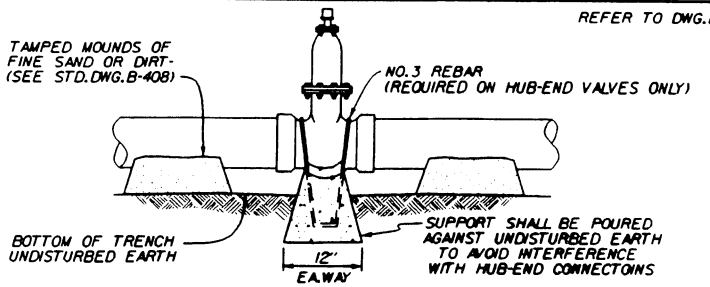

A.C., P.V.C. & D.I.P. PIPELINE INSTALLATION FOR 4" DIAMETER AND LARGER

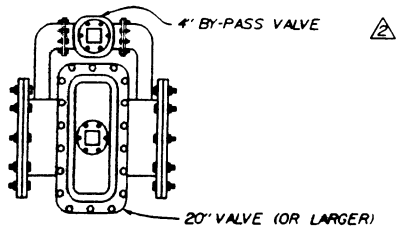

* VALVES 20" & LARGER (W/4" BY-PASS)

NOTES

2 1. ALL FLEXIBLE JOINTS IN PIPELINES UPSTREAM FROM VALVES OR IN BRANCH LINE SHALL BE WELDED OR RESTRAINED IN ACCORDANCE WITH THE SPECIFICATIONS AND CONTRACT DRAWINGS TO PROVIDE ANCHORAGE FOR UNBALANCED FORCES.

2. ALL STEEL FLANGES SHALL BE COATED IN FIELD WITH AN APPROVED COATING PER E.M.W.D. SPECIFICATIONS.

3. ALL STEEL PIPE AND FITTINGS SHALL BE COATED WITH THE SAME MATERIAL AS SUPPLIED ON THE PIPE.

4. VALVES 20" & LARGER REQUIRE ENGINEERS APPROVAL.

REVISIONS					
NO.	DATE	INITIAL	DESCRIPTION	APP'D	DATE
1	8/6/96	KER	REDRAWN W/CADD ON MYLAR	VJB	8/7/96
2	7/29/97	KER	REVISED NOTE NO. 1	VJB	8/28/97

APPROVALS		
	INITIAL	DATE
DESIGN	M.M.	11/20/72
CONSTRUCTION		
INSPECTION		
OPERATIONS		
SUBMITTED	L.M.	11/21/72

EASTERN MUNICIPAL WATER DISTRICT
STANDARD DRAWING

INSTALLATION OF VERTICAL GATE VALVES

STEEL PIPE 14" & LARGER / A.C., P.V.C., & D.I. 4" & LARGER

REFERENCES: ORIGINAL STD. DWG. B-255, DRAWN 11/20/72 | SCALE: NONE
FILE I.D.: D_STANDARDS/B255.DGN | DRAWN BY K.E.R.

RECOMMENDED _____ DIRECTOR OF ENGINEERING DATE

APPROVED Doyle F. Boen 11/72 CHIEF ENGINEER DATE

B-255 2

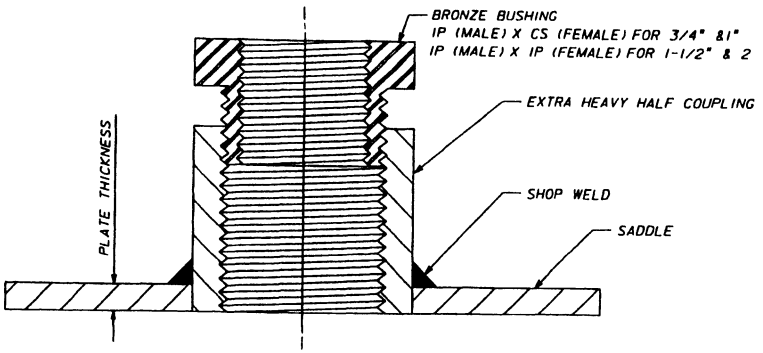

NOTES:

1. SADDLE CURVATURE TO BE SHOP FORMED TO MEET OUTSIDE STEEL DIAMETER OF PIPE.
2. AFTER SHOP WELDING OF HALF COUPLING TO CURVED SADDLE, SHOP GRIND HALF COUPLING TO MEET DIAMETER OF PIPE.

SERVICE SADDLE OUTLETS			
CORPORATION STOPS	EXTRA HEAVY HALF COUPLING SIZE	SADDLE OUTSIDE DIA	SADDLE PLATE THICKNESS
3/4" (CS)	1-1/4" (IP)	4-1/2" (OD)	3/16"
1" (CS)	1-1/4" (IP)	4-1/2" (OD)	3/16"
1-1/2" (IP)	2-1/2" (IP)	6-1/2" (OD)	1/4"
2" (IP)	2-1/2" (IP)	6-1/2" (OD)	1/4"

WELDED SERVICE SADDLE OUTLETS SHOWING BRONZE BUSHING FOR 3/4" THRU 2" CORPORATION STOPS

OUTLET DIMENSIONS		SADDLE SIZE	SADDLE O.D.
NOM DIA	T1 (MIN)	T2 X W	OD
4"	12 GA	5/16" X 2"	10"
6"	12 GA	5/16" X 3"	13"
8"	12 GA	3/8" X 4"	17"
12"	3/16"	3/8" X 6"	25"
14"	1/4"	3/8" X 7"	29"
16"	1/4"	1/2" X 7"	31"
18"	1/4"	1/2" X 8"	36"
20"	1/4"	1/2" X 9"	40"
24"	5/16"	1/2" X 10"	46"
30"	5/16"	1/2" X 12"	56"
36"	5/16"	1/2" X 14"	66"

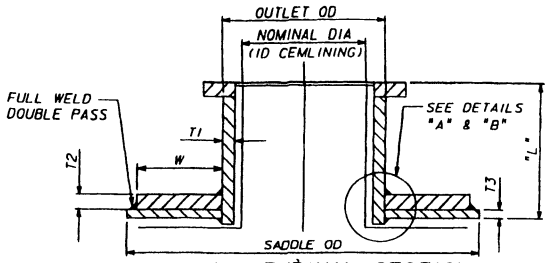

LONGITUDINAL SECTION

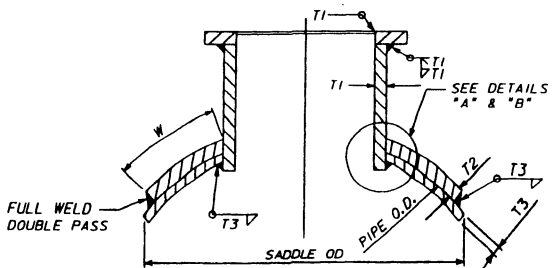

TRANSVERSE SECTION

NOTES:

1. OUTLETS ARE DESIGNED FOR A MAXIMUM TEST PRESSURE OF 225 PSI.
2. FABRICATION SHALL BE IN ACCORDANCE WITH THE APPLICABLE SECTIONS OF THE LATEST REVISION OF THE API - ASME CODE FOR UNIFIRED PRESSURE VESSELS.
3. ALL OUTLETS SHALL BE CEMENT MORTAR LINED AND COATED. ALL OTHER BARE METAL SHALL BE COATED WITH AN APPROVED BITUMASTIC.
4. REFER TO B-288 FOR FLANGE DIMENSIONS.
5. L = 12" FOR SHOP FABRICATED OUTLETS. L= 5" MIN/6" MAX FOR FIELD INSTALLED WET TAPPED OUTLETS.
6. T3 IS THE PIPE CYLINDER THICKNESS.

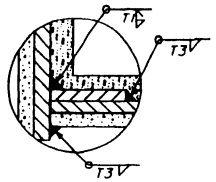

DETAIL "A"
SIZES 24" & LARGER

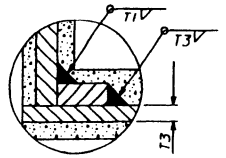

DETAIL "B"
SIZES 4" THRU 20"

PIPE OUTLETS SADDLE REINFORCEMENT

REVISIONS					
NO.	DATE	INITIAL	DESCRIPTION	APP'D	DATE
1	8/11/97	CRD	A-297, B-271 REDRAWN ON CAD. ADDED NOTE 6.	VJB	8/12/97
2	10/15/03	CM	ADDED SADDLE O.D.	VJB	10/15/03

APPROVALS		
	INITIAL	DATE
DESIGN	LVJ	
CONSTRUCTION		
INSPECTION		
OPERATIONS		
SUBMITTED	LVJ	

EASTERN MUNICIPAL WATER DISTRICT

EASTERN MUNICIPAL WATER DISTRICT
STANDARD DRAWING

SADDLE OUTLETS 3/4" TO 36" DIAMETERS

REFERENCES: SUPERCEDES A-297
FILE I.D.: \\niagra apl\eng\std dwgs\b271.dgn
SCALE: NTS
DRAWN BY CRD

RECOMMENDED D.C. Stewart DATE

APPROVED Doyle F. Boen GENERAL MANAGER & CHIEF ENGINEER DATE

B-271 2

UNSURFACED MEDIANS, ROADSIDE STRIPS, & EASEMENTS

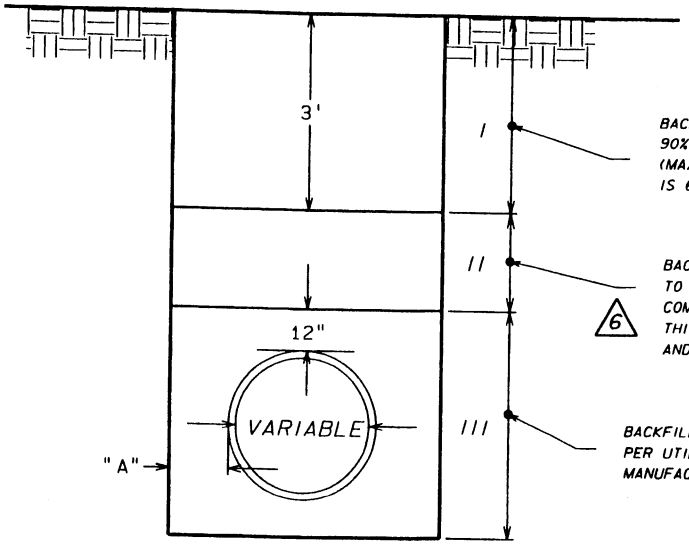

BACKFILL COMPACTED TO 90% RELATIVE COMPACTION (MAXIMUM LIFT THICKNESS IS 6 INCHES).

BACKFILL COMPACTED TO 90% RELATIVE COMPACTION. MAXIMUM LIFT THICKNESS WHEN PONDING AND JETTING IS 2 FEET.

6

BACKFILL AND UTILITY BACKFILL PER UTILITY COMPANY OR MANUFACTURER'S SPECIFICATION.

UNSURFACED ROADWAYS, AND SURFACED STREETS & EASEMENTS

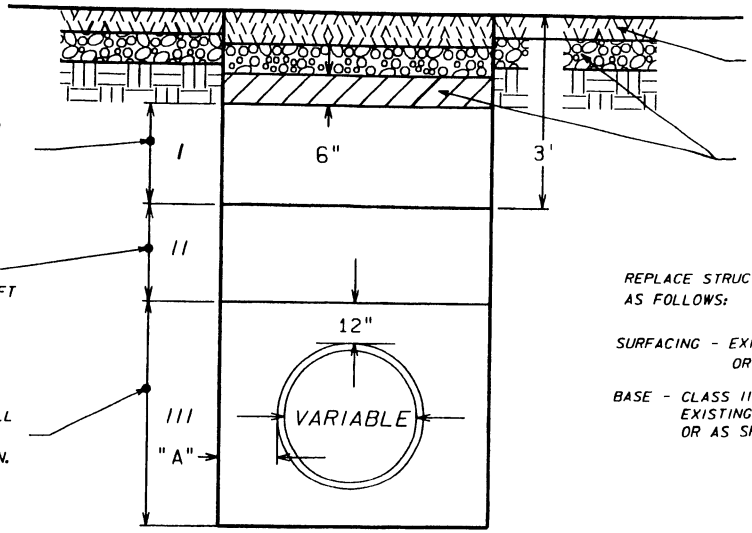

SURFACING (EXCLUDING GRAVEL ROADS).

BASE MATERIAL AND SUB-GRADE, COMPACTED TO 95% RELATIVE COMPACTION.

REPLACE STRUCTURAL SECTION AS FOLLOWS:

SURFACING - EXISTING THICKNESS PLUS 1" OR 3" MINIMUM

BASE - CLASS II, THICKNESS SHALL EQUAL EXISTING BASE MATERIAL, 4" MIN. OR AS SPECIFIED

CLEARANCE "A"

1. PIPE SIZES THROUGH 12" : "A" = 6" - 9"
2. PIPE SIZES OVER 12" : "A" = 1' - 0" MIN.

I. STRUCTURAL ZONE
II. INTERMEDIATE ZONE
III. PIPE AND UTILITY ZONE

NOTE: WHEN A FIRM FOUNDATION IS NOT ENCOUNTERED, DUE TO SOFT, SPONGY, OR OTHER UNSUITABLE MATERIAL, SUCH MATERIAL SHALL BE REMOVED TO THE LIMITS DIRECTED BY THE ENGINEER, AND THE RESULTING EXCAVATION BACKFILLED WITH PIPE BEDDING MATERIAL COMPACTED TO 90% RELATIVE COMPACTION.

REVISIONS

NO.	DATE	INITIAL	DESCRIPTION	APP'D	DATE
5	7/9/98	KER	REVISED TO INCLUDE ALL PREVIOUS REVISIONS	[illegible]	10/15/03
6	9/25/03	CM	REVISED COMPACTION REQUIREMENT		

APPROVALS

	INITIAL	DATE
DESIGN	JJW	12/29/94
CONSTRUCTION		
INSPECTION	JEW	12/30/94
OPERATIONS		
SUBMITTED		

EASTERN MUNICIPAL WATER DISTRICT

EASTERN MUNICIPAL WATER DISTRICT STANDARD DRAWING

TRENCH BACKFILL

REFERENCES: REFERENCE SA-40B

FILE I.D.: \\niagra api\eng\std drgs\b286b.dgn

SCALE: NTS

DRAWN BY JJW

RECOMMENDED Joseph D. Van Sickle 12/29/94
DIRECTOR OF ENGINEERING DATE

APPROVED G. Hooite Rugge 12/30/94
ASST GENERAL MANAGER, ENGINEERING DATE

B-286B 6

D:\REVb286b.dgn 09/25/03 01:29:15 PM

FLANGE DIMENSIONS

PIPE DIA.	FLANGE		GASKET O.D.	BOLTS			BOLT HOLE DIA.	B.C. DIA.
	O.D.	THICKNESS		REQ'D	DIA.	(NOTE 9) LENGTH		
4	9	5/8	6-7/8	8	5/8	2-1/2	3/4	7-1/2
6	11	11/16	8-3/4	8	3/4	3	7/8	9-1/2
8	13-1/2	11/16	11	8	3/4	3	7/8	11-3/4
10	16	11/16	13-3/8	12	7/8	3-1/2	1	14-1/4
12	19	13/16	16-1/8	12	7/8	3-1/2	1	17
14	21	15/16	17-3/4	12	1	4	1-1/8	18-3/4
15	22-1/2	1	19-1/4	12	1	4	1-1/8	20-1/4
16	23-1/2	1	20-1/4	16	1	4	1-1/8	21-1/4
18	25	1-1/16	21-5/8	16	1-1/8	4-1/2	1-1/4	22-3/4
20	27-1/2	1-1/8	23-7/8	20	1-1/8	4-1/2	1-1/4	25
21	28-1/2	1-3/16	24-3/4	20	1-1/4	5	1-3/8	26-1/4
24	32	1-1/4	28-1/4	20	1-1/4	5	1-3/8	29-1/2
27	35-1/2	1-5/16	35-1/2	28	1-1/4	5-1/2	1-3/8	33
28	36-1/2	1-5/16	36-1/2	28	1-1/4	5-1/2	1-3/8	34
30	38-3/4	1-3/8	38-3/4	28	1-1/4	5-1/2	1-3/8	36
33	43-3/4	1-1/2	43-3/4	32	1-1/2	6	1-5/8	40-1/2
36	46	1-5/8	46	32	1-1/2	6	1-5/8	42-3/4
39	49-1/2	1-5/8	49-1/2	36	1-1/2	6-1/2	1-5/8	46-1/4
42	53	1-3/4	53	36	1-1/2	6-1/2	1-5/8	49-1/2
45	56-1/2	1-3/4	56-1/4	44	1-1/2	6-1/2	1-5/8	52-3/4
48	59-1/2	1-3/4	59-1/2	44	1-1/2	6-1/2	1-5/8	56
51	63	2	63	44	1-1/2	7	1-5/8	59-1/2
54	66-1/4	2-1/4	66-1/4	44	1-3/4	7-1/2	2	62-3/4

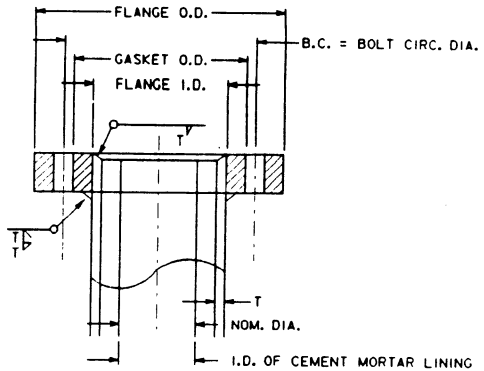

GENERAL NOTES

1. BOLT HOLES STRADDLE CENTER LINES AND ARE DRILLED PER A.S.A. CLASS 125 DRILLING AND TO SPECIFICATIONS FOR A.W.W.A. STANDARD STEEL HUB FLANGES, EXCEPT AS NOTED.
2. FLANGES SHALL NOT HAVE RAISED FACES. FLANGES SHALL BE FULL FACED AND HAVE SPIRAL OR CONCENTRIC SERRATIONS OVER THE ENTIRE FLANGE FACE OF APPROXIMATELY 32 SERRATIONS PER INCH APPROXIMATELY 1/64" DEEP.
3. HOLES SHALL BE DRILLED AFTER SERRATING FACES.
4. ALL DIMENSIONS ARE IN INCHES. TOLERANCES ARE:
   FLANGE O.D. +/- 1/8
   BOLT CIRCLE DIA. +/- 1/16
   FLANGE I.D. + 3/16" + 1/16
   FLANGE THICKNESS +1/8 - 0
   FLANGE I.D. NOTED ON PURCHASE ORDER.
5. FLANGES ARE DESIGNED FOR 175 P.S.I. (COLD WATER) WORKING PRESSURE FOR SIZES THROUGH 12" AND 150 P.S.I. FOR SIZES LARGER THAN 12".
6. FLANGES SHALL BE MADE AS SHOWN HEREIN AND FROM THE FOLLOWING TYPE OF STEEL PLATE UNLESS OTHERWISE STATED IN THE SPECIFICATIONS.
   A.S.T.M. A 283C
   A.S.T.M. A 283D
   A.S.T.M. A-36
7. SCREWED FLANGES, WHERE REQUIRED, SHALL BE CRANE NO. 556 OR APPROVED EQUAL.
8. GASKETS FOR 27" DIA. PIPE AND LARGER SHALL BE STANDARD FULL FACE GASKETS.
9. FOR STEEL FLANGES BOLTED TO CAST IRON FLANGES, USE BOLTS 1/2" LONGER THAN SHOWN.
10. BOLTS AND NUTS SHALL BE SAE J429 GRADE 5 OR ASTM A449 THROUGH 1-1/2" DIAMETER. (1)
11. EACH FITTING TO HAVE A MINIMUM OF 2 ZINC CAP ANODES FOR UP TO 1" DIA. BOLTS AND 4 ZINC CAP ANODES FOR BOLTS OVER 1". (1)

REVISIONS					
NO.	DATE	INITIAL	DESCRIPTION	APP'D	DATE
1	5-6-97	CRD	REVISED NOTES 10,11; UPDATED W/CAD ON MYLAR.	VJB	5/7/97

APPROVALS		
	INITIAL	DATE
DESIGN	SJD	7—2—64
CONSTRUCTION		
INSPECTION		
OPERATIONS		
SUBMITTED	D. C. Stewart	7—2—64

REFERENCES:
FILE I.D.: d_standards: b288.dgn

SCALE: NONE
DRAWN BY CRD

EASTERN MUNICIPAL WATER DISTRICT
STANDARD DRAWING

STEEL FLANGES
4" - 54"

APPROVED Doyle J. Boan 7—2—64
GENERAL MANAGER & CHIEF ENGINEER DATE

B-288 (1)

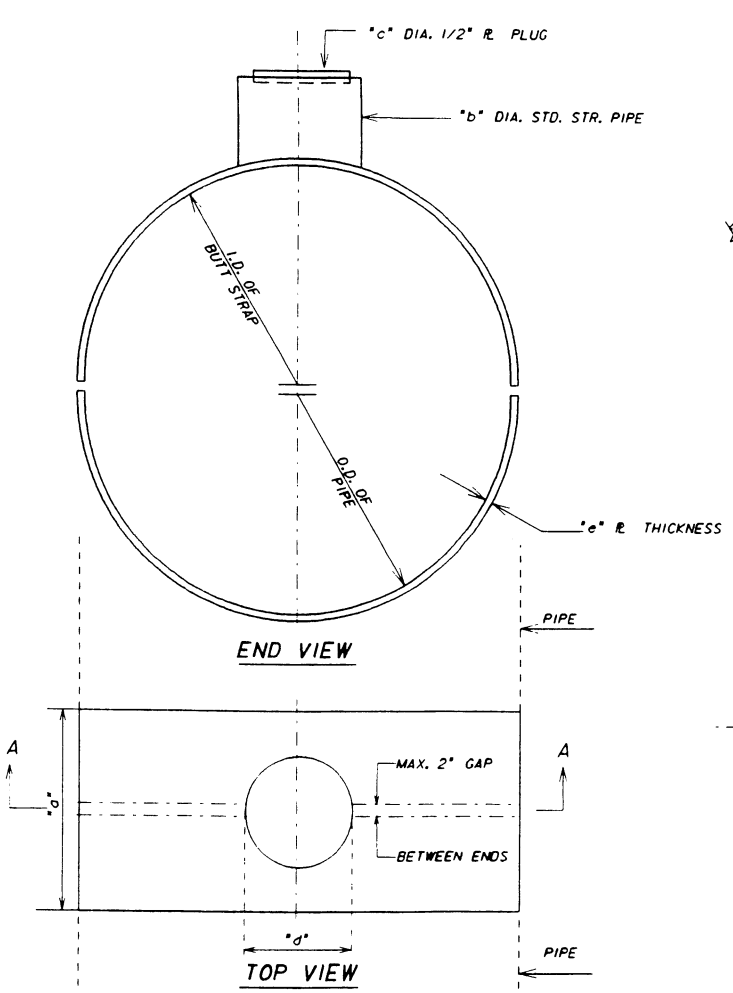

END VIEW

TOP VIEW

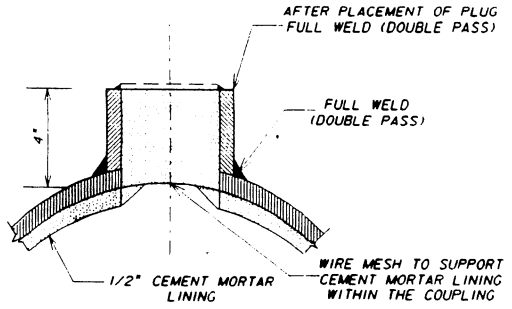

SECTION A-A

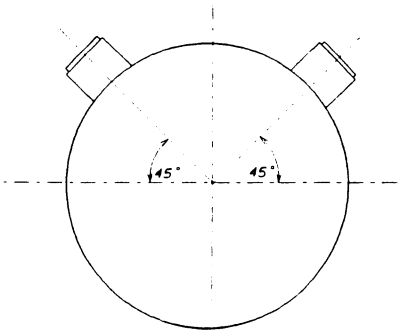

18" - 27" PIPE WILL HAVE 2 HAND HOLES PER THE ABOVE DETAIL. ALL OTHER DIMENSIONS & DETAILS REMAIN THE SAME.

GENERAL NOTES

1. I.D. OF BUTT STRAP EQUALS O.D. OF PIPE

NOM. PIPE DIA.	"a"	"b"	"c"	"d"	"e"(min)		
4"	6"	4"	4.026	4.500	1/8"		
6"	6"	4"	4.026	4.500	1/8"		
8"	6"	4"	4.026	4.500	1/8"		
12"	8"	4"	4.026	4.500	1/8"		
14"	8"	4"	4.026	4.500	1/8"		
16"	8"	6"	6.065	6.625	1/8"		
18"	8"	6"	6.065	6.625	1/8"		
20"	10"	6"	6.065	6.625	3/16"		
21"	10"	6"	6.065	6.625	3/16"		
24"	10"	6"	6.065	6.625	3/16"		
27"	10"	6"	6.065	6.625	3/16"		
30"	10"	NO	HAND	HOLE	3/16"		
33"	10"	NO	HAND	HOLE	1/4"		
36"	10"	NO	HAND	HOLE	1/4"		
39"	10"	NO	HAND	HOLE	1/4"		
42"	10"	NO	HAND	HOLE	5/16"		
45"	10"	NO	HAND	HOLE	5/16"		
48"	10"	NO	HAND	HOLE	5/16"		

REVISIONS					
NO.	DATE	INITIAL	DESCRIPTION	APP'D	DATE
1	01/98	TS	REDRAWN W/CADD ON MYLAR	WJB	1/27/98

APPROVALS		
	INITIAL	DATE
DESIGN	R.A.H	2-14-64
CONSTRUCTION		
INSPECTION		
OPERATIONS		
SUBMITTED	R.V. JONES	

REFERENCES: ORIGINAL B-304 DRAWN 2/14/64
FILE I.D.: D_STANDARDS : B 304.DGN

SCALE: NONE
DRAWN BY TS

EASTERN MUNICIPAL WATER DISTRICT
STANDARD DRAWING

BUTT STRAP DETAILS

APPROVED: Doyle B. Boan
GENERAL MANAGER & CHIEF ENGINEER
DATE

B-304 1

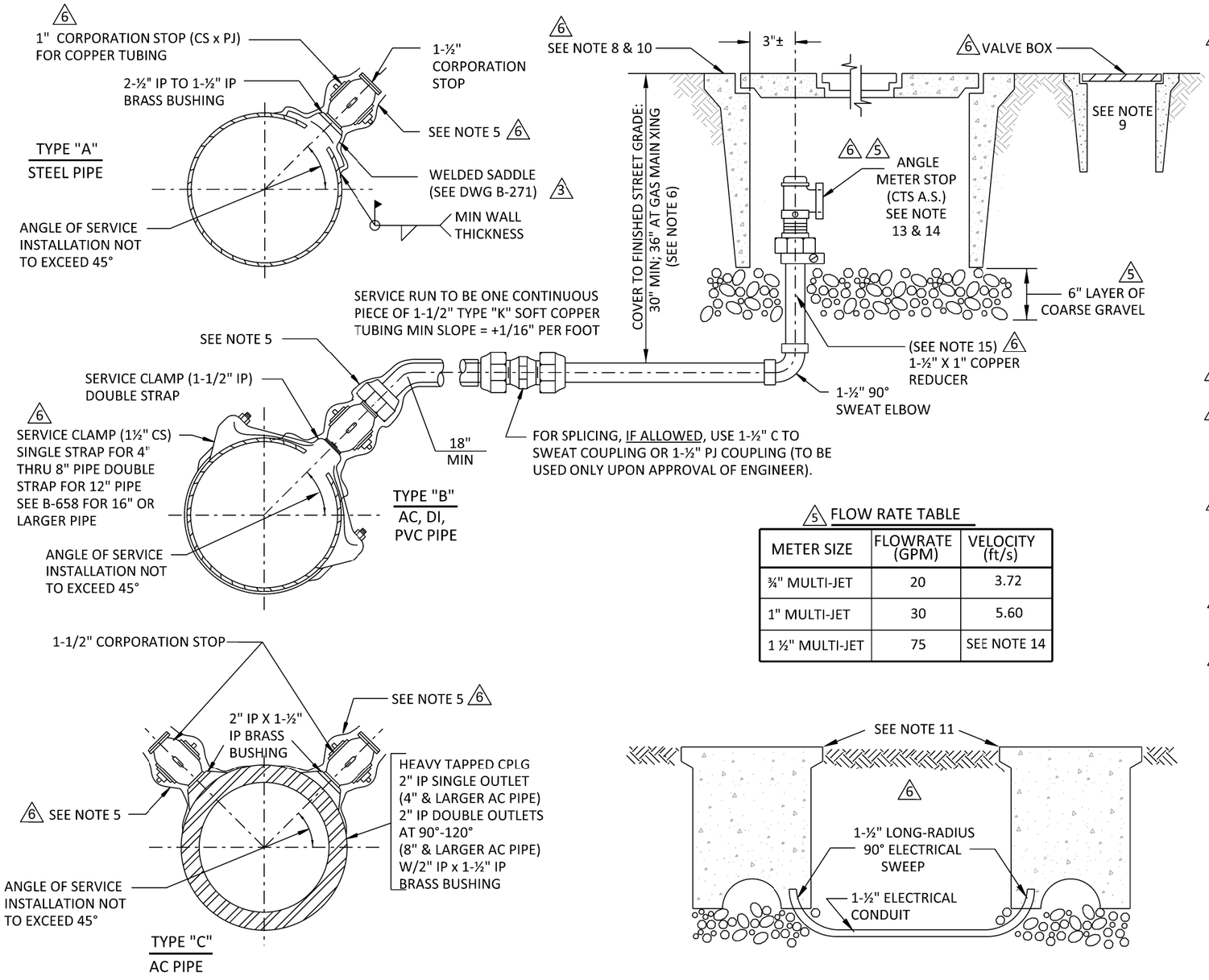

5 FLOW RATE TABLE

METER SIZE	FLOWRATE (GPM)	VELOCITY (ft/s)
¾" MULTI-JET	20	3.72
1" MULTI-JET	30	5.60
1 ½" MULTI-JET	75	SEE NOTE 14

GENERAL NOTES

7 3 1. ALL PIPE AND FITTINGS BETWEEN AND INCLUDING CORPORATION STOP AND BALL VALVE SHALL:
   A. BE MADE OF BRASS OR BRONZE;
   B. BE OF THE BANDED PATTERN;
   C. BE DESIGNED FOR A MIN OF 175 PSI (COLD) WATER WORKING PRESSURE.

2. PRESSURE TEST PER EMWD SPECIFICATIONS.

3. ALL BARE IRON AND STEEL SHALL BE COATED WITH CEMENT MORTAR PER EMWD SPECIFICATIONS.

4. ALL LISTED MATERIALS TO BE PER EMWD APPROVED MATERIALS LIST.

5. CORPORATION STOP, FITTINGS, AND SERVICE LINE WITHIN 3 FEET OF SADDLE SHALL BE PRIMED & WRAPPED WITH APPROVED COAL-TAR RESIN TAPE.

7 6. ALL SERVICE PIPE AND TUBING SHALL BE LAID ON A POSITIVE SLOPE UP FROM THE WATER MAIN TO THE METER. NO DIPS OR POCKETS IN LINE WILL BE PERMITTED. 36" COVER AT GAS MAIN CROSSINGS.

7. THREAD NOTATION SHOWN THUS:
   IP = IRON PIPE THREAD.
   CS = CORPORATION STOP (MUELLER).
   CT = COPPER SERVICE THREAD.
   PJ = PACKING JOINT.

5 2 8. METER BOX SHALL BE EMWD APPROVED COMPLETE WITH TWO-PEICE COVER AND LID PER METER STANDARD DRAWING.

5 3 9. VALVE BOX, IF REQUIRED, SHALL BE PER METER STANDARD DRAWING.

10. CONTRACTOR SHALL RETURN AFTER ROAD SHOULDER OR PARKWAY IS COMPLETE TO INSTALL METER BOX, AND SHALL BE RESPONSIBLE FOR COORDINATING WORK OF OTHER CONTRACTORS FOR SAFEGUARDING SERVICES UNTIL METER BOXES ARE SET.

7 5 11. INSTALL 1-½" PVC SCH. 40 ELECTRICAL CONDUIT BETWEEN ALL METER BOXES THAT ARE LOCATED NEAR PROPERTY LINE WITHNIN 10' OF EA. OTHER. TAPE END OF SWEEPS PREVENTING DEBRIS FROM ENTERING CONDUIT. PLACE SWEEPS INSIDE AND AGAINST SIDE OF METER BOX.

5 12. SYSTEMS WITH ONSITE PUMPS SHALL NOT EXCEED 5 FPS VELOCITY WITHIN THE SERVICE LATERAL. SYSTEMS WITHOUT PUMPS, SHALL NOT EXCEED 10 FPS.

6 5 13. FOR A 1 INCH METER INSTALLATION AN 1-½" METER FLANGE X FNPT WITH 1" METER TAIL PIECE WILL BE REQUIRED. FOR A ¾" METER INSTALL A 1" X ¾" METER BUSHING WILL BE REQIRED. SEE MANUFACTURER'S SPECIFICATIONS FOR METER INSTALLATION.

6 5 14. FOR SINGLE FAMILY RESIDENTIAL UNITS, ENGINEER TO VERIFY THE ADEQUACY OF THE SERVICE LATERAL SIZE TO ALLOW FOR OPERATION OF RESIDENTIAL FIRE SPRINKLER SYSTEM. FOR COMMERCIAL AND INDUSTRIAL APPLICATIONS, SERVICE LATERAL SIZES WILL BE BASED ON VELOCITIES BEING UNDER 10 FT/S.

6 15. 1-½" COPPER SERVICE LATERAL TO BE REDUCED TO 1" COPPER AFTER THE 90° TRANSITION. A 1" METER ANGLE STOP TO BE INSTALL WITH METER REDUCER BUSHING.

PLACEMENT OF METER BOX

A. PLACE FRONT EDGE OF METER BOX 6" BEHIND EXISTING OR PROPOSED 6' OR 8' SIDEWALKS.

B. WHEN PROPOSED OR EXISTING SIDEWALK IS 12' WIDE, PLACE FRONT EDGE OF BOX 1.5' BEHIND CURB USING APPROPRIATE BOX.

C. WHEN NO SIDEWALK IS PROPOSED, PLACE FRONT EDGE OF METER BOX 7.5' BEHIND CURB.

6 D. UPON COMPLETION OF WATER SYSTEM, WHEN NO CURBS ARE EXISTING NOR WILL BE INSTALLED, PLACE BACK EDGE OF METER BOX ON PROPERTY LINE.

E. A MINIMUM 5' SEPARATION IS TO BE BETWEEN SEWER LATERAL AND WATER SERVICE.

5 F. WHEN INSTALLED IN CONCRETE (SIDEWALK), SEE METER STANDARD DRAWING FOR METER BOX INSTALLATION SPECIFICATIONS.

REVISIONS

NO.	DATE	INITIAL	DESCRIPTION	APP'D	DATE
7	12/21/16	GS	UPDATED LOGO AND NOTE 1, 6, AND 11	AGA	12/30/16
6	9/2/14	GS	ADDED ELECTRIC CONDUIT DETAIL, REMOVED CONCRETE INSTALLATION DETAIL, AND REVISED NOTES	AGA	10/30/14
5	4/1/14	GS	REVISE TITLE SHEET, TITLE, ADDED METER FLOW RATE TABLE AND NOTES F, 8, 9, 11, 12, 13, 14, & 15	AGA	4/9/14

APPROVALS

	INITIAL	DATE
DESIGN		
CONSTRUCTION		
INSPECTION	ML	10/23/95
OPERATIONS		
SUBMITTED		

emwd EASTERN MUNICIPAL WATER DISTRICT

EASTERN MUNICIPAL WATER DISTRICT
STANDARD DRAWING

1-1/2'' COPPER SERVICE CONNECTION 4 5

REFERENCES: ORIGINAL DRAWN 8/68
FILE I.D.: \kauai\eng\std dwgs\B-342A.dgn

SCALE: NONE
DRAWN BY: KER

RECOMMENDED Joseph D. Van Sickle 10/20/95
DIRECTOR OF ENGINEERING DATE

APPROVED G. Hoyte Rugge 10/20/95
CHIEF ENGINEER DATE

B-342A 7

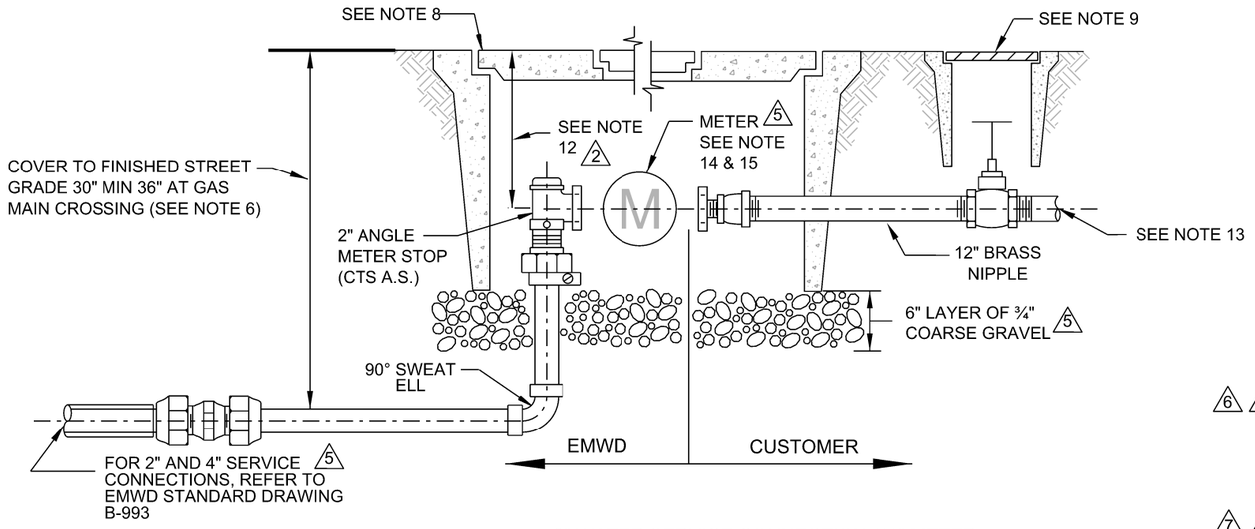

2" WATER SERVICE CONNECTION 1½" METER

NOT TO SCALE

FLOW RATE TABLE 5 6

LATERAL SIZE	METER SIZE	FLOWRATE (GPM)	VELOCITY (ft/s)	METER LENGTH
2" COPPER	1½" MULTIJET	75	8.00	13"
4" SERVICE	1½" MULTIJET	75	2.00	13"

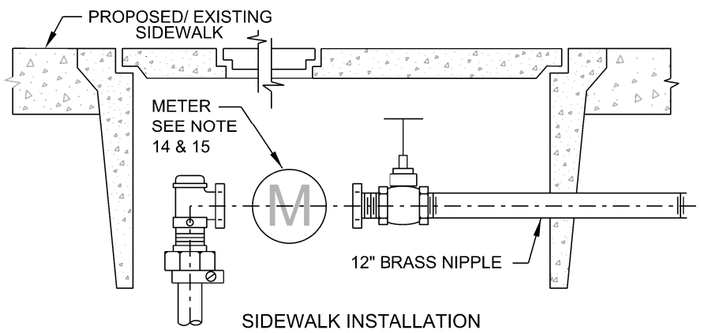

SIDEWALK INSTALLATION

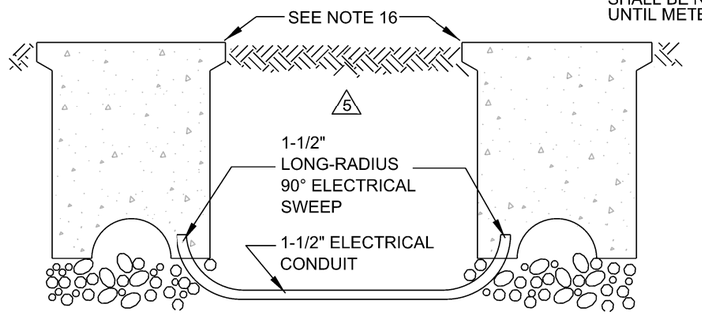

GENERAL NOTES 5

1. ALL PIPE AND FITTINGS BETWEEN AND INCLUDING THE CORPORATION STOP AND GATE VALVE SHALL:
   A. BE MADE OF BRASS OR BRONZE;
   B. BE OF THE BANDED PATTERN;
   C. BE DESIGNED FOR A MIN OF 175 PSI (COLD) WATER WORKING PRESSURE.
2. PRESSURE TEST PER EMWD SPECIFICATIONS.
3. ALL BARE IRON AND STEEL SHALL BE COATED WITH CEMENT MORTAR AS PER THE FIELD ENGINEER.
4. ALTERNATE MATERIALS MAY BE USED UPON APPROVAL BY THE ENGINEER.
5. CORPORATION STOP, FITTINGS, AND SERVICE LINE WITHIN 3 FEET OF SADDLE SHALL BE PRIMED AND WRAPPED WITH APPROVED COAL-TAR RESIN TAPE.
6. ALL SERVICE PIPE AND TUBING SHALL BE LAID ON A CONSTANT SLOPE UP FROM THE WATER MAIN TO THE METER. NO DIPS OR POCKETS IN LINE WILL BE PERMITTED; 36" COVER AT GAS MAIN CROSSINGS.
7. THREAD NOTATION SHOWN THUS:
   IP = IRON PIPE THREAD;
   CS = CORPORATION STOP (MUELLER) THREAD;
   CT = COPPER SERVICE THREAD.

6 2 8. METER BOX SHALL BE EMWD APPROVED 13" x 24" COMPLETE WITH TWO PIECE COVER, LID, AND ONE (1) - 7" EXTENSION WITH KNOCKOUTS AND AMR/AMI ANTENNAPORT (SEE NOTE F FOR SIDEWALK INSTALLATION).

9. VALVE BOX SHALL BE EMWD APPROVED 8" DIA x 10" DEEP, COMPLETE WITH COVER.
10. ORIFICE PLATE RESTRICTING MAXIMUM FLOW TO BE INSTALLED WHEN REQUIRED PER CUSTOMER SERVICE ENGINEER.

7 3 11. WHEN METER IS FURNISHED BY OTHERS, USE 1½" GALV NIPPLE C/W 1½" METER FLANGES AT EACH END. LOCK ANGLE METER STOP CLOSED WITH LEAD SEAL AND THREE-STRAND SEALING WIRE. REFER TO FLOW RATE TABLE FOR NIPPLE LENGTH.

12. METER PORT HOLES CENTER TO BE INSTALLED 10" BELOW TOP OF METER BOX.
13. SERVICES THAT REQUIRE BACKFLOW PROTECTION FOR ONSITE HAZARDS PER EMWD ORD. 69 SHALL BE PER B-597

5 14. SYSTEMS WITH ONSITE PUMPS SHALL NOT EXCEED 5 FPS VELOCITY WITHIN THE SERVICE LATERAL. SYSTEMS WITHOUT PUMPS, SHALL NOT EXCEED 10 FPS. (SEE B-342A)

5 15. FOR SINGLE FAMILY RESIDENTIAL UNITS, ENGINEER TO VERIFY THE ADEQUACY OF THE SERVICE LATERAL SIZE TO ALLOW FOR OPERATION OF RESIDENTIAL FIRE SPRINKLER SYSTEM. FOR COMMERCIAL AND INDUSTRIAL APPLICATIONS, SERVICE LATERAL SIZE WILL BE BASED ON VELOCITIES BEING UNDER 10 FT/S

5 16. INSTALL 1-1/2" PVC SCH. 40 ELECTRICAL CONDUIT BETWEEN ALL METER BOXES THAT ARE LOCATED NEAR PL WITHIN 10' OF EA. OTHER. TAPE END OF SWEEPS PREVENTING DEBRIS FROM ENTERING CONDUIT. PLACE SWEEPS INSIDE AND AGAINST SIDE OF METER BOX.

5 17. CONTRACTOR SHALL RETURN AFTER ROAD SHOULDER OR PARKWAY IS COMPLETE TO INSTALL METER BOX, AND SHALL BE RESPONSIBLE FOR COORDINATING WORK OF OTHER CONTRACTORS FOR SAFEGUARDING SERVICES UNTIL METER BOXES ARE SET.

PLACEMENT OF METER BOX

A. PLACE FRONT EDGE OF METER BOX 1.5' BEHIND EXISTING OR PROPOSED 6' OR 8' SIDEWALKS.

B. WHEN PROPOSED OR EXISTING SIDEWALK IS 12' WIDE, PLACE FRONT EDGE OF METER BOX 1.5' BEHIND CURB USING APPROPRIATE BOX.

C. WHEN NO SIDEWALK IS PROPOSED, PLACE FRONT EDGE OF METER BOX 7.5' BEHIND CURB.

D. WHEN NO CURBS ARE EXISTING OR TO BE INSTALLE UPON COMPLETION OF THE WATER SYSTEM, PLACE BACK EDGE OF METER BOX ON PROPERTY LINE.

E. MINIMUM 5' SEPARATION BETWEEN SEWER LATERAL AND WATER SERVICE.

F. WHEN INSTALLED IN CONCRETE (SIDEWALK), USE 30" x 48" METER BOX WITH 2 PC LID ASSEMBLY WHICH INCLUDES CI READING LID.

REVISIONS					
NO.	DATE	INITIAL	DESCRIPTION	APP'D	DATE
7	8/25/16	GS	REVISED NOTE 11 WITH METER LENGTH	AGA	8/26/16
6	6/9/15	GS	REVISED METER DATA TABLE AND NOTE #8	AGA	6/9/15
5	3/22/14	GS	REVISED TITLE, ADDED NOTES 14, 15, 16, & 17, FLOW RATE TABLE, ELECTRICAL CONDUIT DETAIL, REMOVED POC DETAIL	AGA	10/30/14
4	3/22/01	GR	REVISED FILE ID NO.		

APPROVALS		
	INITIAL	DATE
DESIGN		
CONSTRUCTION		
INSPECTION		
OPERATIONS	ML	10/23/95
SUBMITTED		

EASTERN MUNICIPAL WATER DISTRICT

EASTERN MUNICIPAL WATER DISTRICT

EASTERN MUNICIPAL WATER DISTRICT
STANDARD DRAWING

1 1/2" METER INSTALLATION 5

REFERENCES: ORIG DRAWN 10/70

FILE I.D.: \kauai\eng\std dwgs\B-342.dgn

SCALE: NONE

DRAWN BY: KER

RECOMMENDED Joseph D. Van Sickle 10/20/95
DIRECTOR OF ENGINEERING DATE

APPROVED G. Hooite Rugge 10/20/95
CHIEF ENGINEER DATE

B-342

7

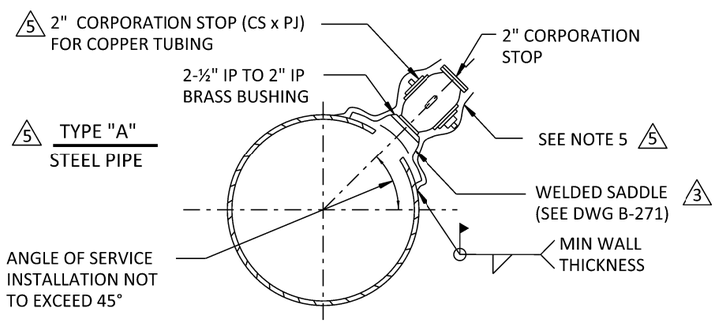

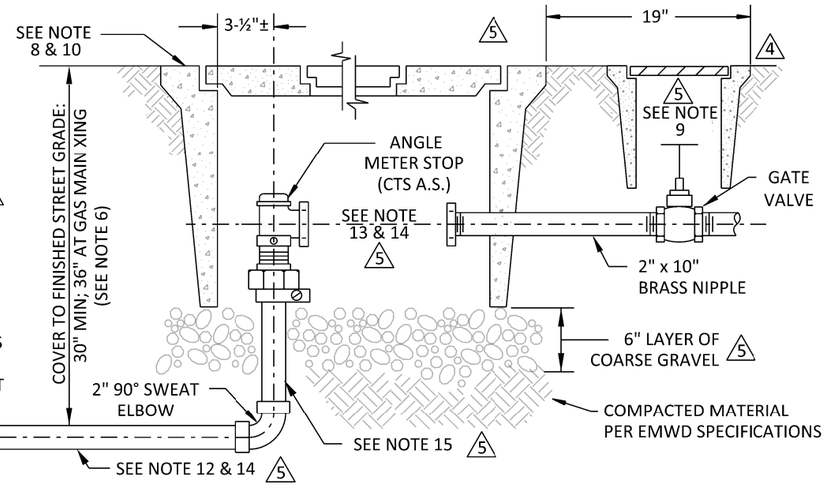

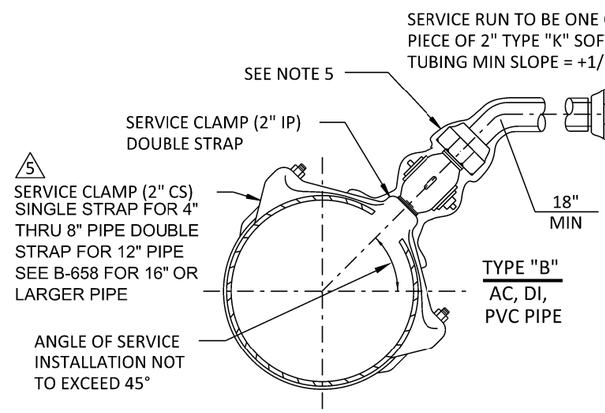

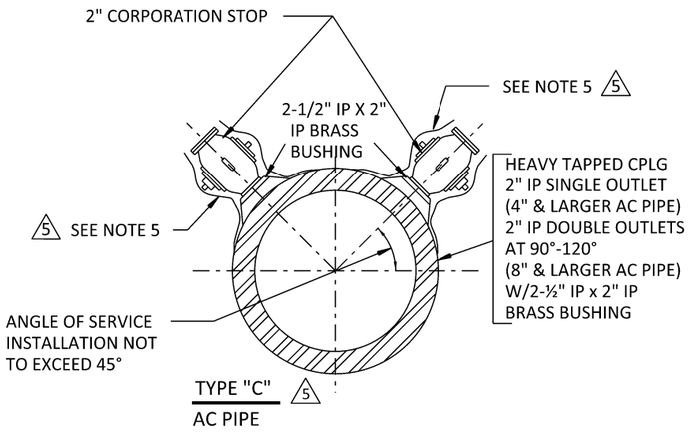

FLOW RATE TABLE 5

FUTURE METER SIZE	FLOW RATE (GPM)	EMWD STD DWG	VELOCITY (FT/S)	METER LENGTH
⅝" MULTIJET	15	B-590	1.6	7½"
¾" MULTIJET	20	B-590	2.13	7½"
1" MULTIJET	30	B-591	3.19	10¾"
1½" MULTIJET	75	B-342	7.98	13"

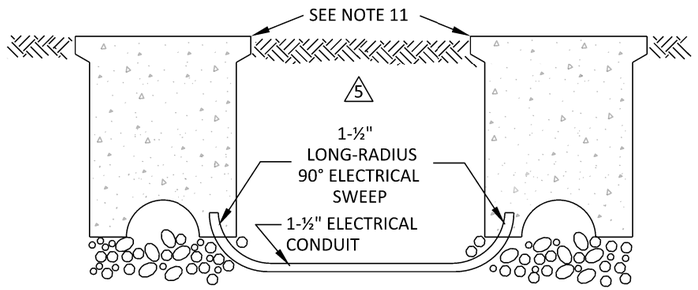

GENERAL NOTES 5

1. ALL PIPE AND FITTINGS BETWEEN AND INCLUDING CORPORATION STOP AND GATE VALVE SHALL:
   A. BE MADE OF BRASS OR BRONZE;
   B. BE OF THE BANDED PATTERN;
   C. BE DESIGNED FOR A MIN OF 175 PSI (COLD) WATER WORKING PRESSURE.
3 2. PRESSURE TEST PER EMWD SPECIFICATIONS.
3. ALL BARE IRON AND STEEL SHALL BE COATED WITH CEMENT MORTAR PER EMWD SPECIFICATIONS.
4. ALL LISTED MATERIALS TO BE PER EMWD APPROVED MATERIALS LIST.
5. CORPORATION STOP, FITTINGS, AND SERVICE LINE WITHIN 3 FEET OF SADDLE SHALL BE PRIMED & WRAPPED WITH APPROVED COAL-TAR RESIN TAPE.
6. ALL SERVICE PIPE AND TUBING SHALL BE LAID ON A POSITIVE SLOPE UP FROM THE WATER MAIN TO THE METER. NO DIPS OR POCKETS IN LINE WILL BE PERMITTED. 36" COVER AT GAS MAIN CROSSINGS.
7. THREAD NOTATION SHOWN THUS:
   IP = IRON PIPE THREAD.
   CS = CORPORATION STOP (MUELLER).
   CT = COPPER SERVICE THREAD.
   PJ = PACKING JOINT.
8. METER BOX SHALL BE EMWD APPROVED COMPLETE WITH TWO-PIECE COVER AND LID WITH AMR/AMI ANTENNA PORT PER METER STANDARD DRAWING.
9. VALVE BOX, IF REQUIRED, SHALL BE PER METER STANDARD DRAWING.
10. CONTRACTOR SHALL RETURN AFTER ROAD SHOULDER OR PARKWAY IS COMPLETE TO INSTALL METER BOX, AND SHALL BE RESPONSIBLE FOR COORDINATING WORK OF OTHER CONTRACTORS FOR SAFEGUARDING SERVICES UNTIL METER BOXES ARE SET.
11. INSTALL 1-½" PVC SCH. 40 ELECTRICAL CONDUIT BETWEEN ALL METER BOXES THAT ARE LOCATED NEAR PL WITHNIN 10' OF EA. OTHER. TAPE END OF SWEEPS PREVENTING DEBRIS FROM ENTERING CONDUIT. PLACE SWEEPS INSIDE AND AGAINST SIDE OF METER BOX.
12. SYSTEMS WITH ONSITE PUMPS SHALL NOT EXCEED 5 FPS VELOCITY WITHIN THE SERVICE LATERAL. SYSTEMS WITHOUT PUMPS, SHALL NOT EXCEED 10 FPS.
13. FOR A 1 INCH METER INSTALLATION AN 1-½" METER FLANGE X FNPT WITH 1" METER TAIL PIECE WILL BE REQUIRED. FOR A ¾" & ⅝" METER INSTALL A 1" X ¾" METER BUSHING WILL BE REQIRED. SEE MANUFACTURER'S SPECIFICATIONS FOR METER INSTALLATION.
14. FOR SINGLE FAMILY RESIDENTIAL UNITS, ENGINEER TO VERIFY THE ADEQUACY OF THE SERVICE LATERAL SIZE TO ALLOW FOR OPERATION OF RESIDENTIAL FIRE SPRINKLER SYSTEM. FOR COMMERCIAL AND INDUSTRIAL APPLICATIONS, SERVICE LATERAL SIZES WILL BE BASED ON VELOCITIES BEING UNDER 10 FT/S.
15. 2" COPPER SERVICE LATERAL TO BE REDUCED TO 1-½" OR 1" COPPER AFTER THE 90° TRANSITION. A 1" METER ANGLE STOP TO BE INSTALLED WITH METER REDUCER BUSHING.

PLACEMENT OF METER BOX

A. PLACE FRONT EDGE OF METER BOX 6" BEHIND EXISTING OR PROPOSED 6' OR 8' SIDEWALKS.
B. WHEN PROPOSED OR EXISTING SIDEWALK IS 12' WIDE, PLACE FRONT EDGE OF BOX 1.5' BEHIND CURB USING APPROPRIATE BOX.
C. WHEN NO SIDEWALK IS PROPOSED, PLACE FRONT EDGE OF METER BOX 7.5' BEHIND CURB.
D. UPON COMPLETION OF WATER SYSTEM, WHEN NO CURBS ARE EXISTING NOR WILL BE INSTALLED, PLACE BACK EDGE OF METER BOX ON PROPERTY LINE.
E. A MINIMUM 5' SEPARATION IS TO BE BETWEEN SEWER LATERAL AND WATER SERVICE.
F. WHEN INSTALLED IN CONCRETE (SIDEWALK), SEE METER STANDARD DRAWING FOR METER BOX INSTALLATION SPECIFICATIONS.

REVISIONS

NO.	DATE	INITIAL	DESCRIPTION	APP'D	DATE
5	6/22/15	GS	REVISED CALLOUTS, NOTES AND ADDED FLOW RATE TABLE	AGA	8/31/16
4	8/28/03	CM	RELOCATE FUTURE VALVE BOX	VJB	10/15/03
3	5/22/00	GR	REVISED NOTE 2 & DWG NO IN CALLOUT	VJB	5/24/00
2	2/10/97	CRD	REVISED NOTE 8, ADDED COMPACTED MATERIAL	VJB	4/4/97
1	8/17/95	KER	REDRAWN W/CADD ON MYLAR	VJB	10/95

REFERENCES: SUPERCEDES B-343A
FILE I.D.: \kauai\eng\std dwgs\B-344A.dgn
SCALE: NONE
DRAWN BY: KER

APPROVALS

	INITIAL	DATE
DESIGN		
CONSTRUCTION		
INSPECTION		
OPERATIONS	ML	10/23/95
SUBMITTED		

RECOMMENDED Joseph D. Van Sickle 10/20/95
DIRECTOR OF ENGINEERING — DATE

emwd EASTERN MUNICIPAL WATER DISTRICT

EASTERN MUNICIPAL WATER DISTRICT
STANDARD DRAWING

2" COPPER SERVICE CONNECTION

APPROVED G. Hoote Rugge 10/20/95
CHIEF ENGINEER — DATE

B-344A 5

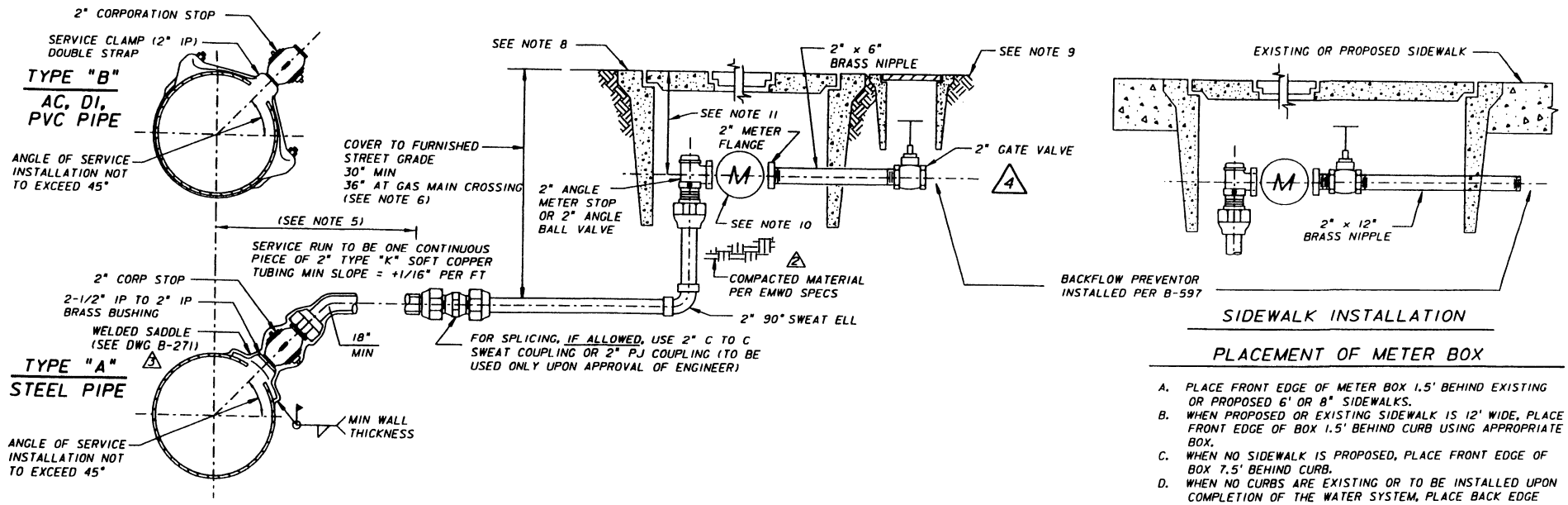

SIDEWALK INSTALLATION

PLACEMENT OF METER BOX

A. PLACE FRONT EDGE OF METER BOX 1.5' BEHIND EXISTING OR PROPOSED 6' OR 8" SIDEWALKS.
B. WHEN PROPOSED OR EXISTING SIDEWALK IS 12' WIDE, PLACE FRONT EDGE OF BOX 1.5' BEHIND CURB USING APPROPRIATE BOX.
C. WHEN NO SIDEWALK IS PROPOSED, PLACE FRONT EDGE OF BOX 7.5' BEHIND CURB.
D. WHEN NO CURBS ARE EXISTING OR TO BE INSTALLED UPON COMPLETION OF THE WATER SYSTEM, PLACE BACK EDGE OF METER BOX ON PROPERTY LINE.
E. MIN 5' SEPARATION BETWEEN SEWER LATERAL AND WATER SERVICE.
F. WHEN INSTALLED IN CONCRETE (SIDEWALK), USE 30" x 48" METER BOX WITH 2 PIECE LID ASSEMBLY WHICH INCLUDES CI READING LID.

GENERAL NOTES

1. ALL PIPE AND FITTINGS BETWEEN AND INCLUDING THE CORPORATION STOP AND GATE VALVE SHALL:
   A. BE MADE OF BRASS OR BRONZE;
   B. BE OF THE BANDED PATTERN;
   C. BE DESIGNED FOR A MIN OF 175 PSI (COLD) WATER WORKING PRESSURE.
2. PRESSURE TEST PER EMWD SPECIFICATIONS.
3. ALL BARE IRON AND STEEL SHALL BE COATED WITH CEMENT MORTAR AS PER THE FIELD ENGINEER.
4. ALTERNATE MATERIALS MAY BE USED UPON APPROVAL BY THE ENGINEER.
5. CORPORATION STOP, FITTINGS, AND SERVICE LINE WITHIN 3 FEET OF SADDLE SHALL BE PRIMED AND WRAPPED WITH APPROVED COAL-TAR RESIN TAPE.
6. ALL SERVICE PIPE AND TUBING SHALL BE LAID ON A CONSTANT SLOPE UP FROM THE WATER MAIN TO THE METER. NO DIPS OR POCKETS IN THE LINE WILL BE PERMITTED. 36" COVER SHALL BE AT GAS MAIN CROSSINGS.
7. THREAD NOTATION THUS:
   IP = IRON PIPE THREAD;
   CS = CORPORATION STOP (MUELLER) THREAD;
   CT = COPPER SERVICE THREAD.
8. METER BOX SHALL BE EMWD APPROVED 17" x 30" COMPLETE WITH COVER, LID, AND ONE (1) - 7" EXTENSION WITH KNOCKOUTS (SEE NOTE F FOR SIDEWALK INSTALLATION).
9. VALVE BOX SHALL BE EMWD APPROVED 8" DIA x 10" DEEP, COMPLETE WITH COVER AND ONE (1) - 6" EXTENSION.
10. WHEN METER IS FURNISHED BY OTHERS, ANGLE METER STOP SHALL BE LOCKED CLOSED WITH LEAD SEAL AND THREE-STRAND SEALING WIRE.
    A. WITH MULTI-JET METER, USE 2" GALV NIPPLE C/W 2" METER FLANGES ON EACH END--17-3/8" LG OVERALL. 3
    B. WITH COMPOUND METER, USE 2" GALV NIPPLE C/W 2" METER FLANGES ON EACH END--17-3/8" LONG OVERALL. 4
    C. WITH TURBINE METER, USE 2" GALV NIPPLE C/W 2" METER FLANGES ON EACH END--17-3/8" LONG OVERALL.
11. METER PORT HOLES TO BE INSTALLED: 4
    A. 11" BELOW TOP OF METER BOX FOR MULTI-JET METER
    B. 18" BELOW TOP OF METER BOX FOR COMPOUND METER
    C. 18" BELOW TOP OF METER BOX FOR TURBINE METER

REVISIONS

NO.	DATE	INITIAL	DESCRIPTION	APP'D	DATE
1	8/17/95	KER	REDRAWN W/CAD ON MYLAR	VJB	10/95
2	2/6/97	CRD	REVISED NOTE 8, ADDED COMPACTED MATERIAL	VJB	4/4/97
3	5/22/00	GR	REV NOTE 2, 10, CALLOUT, & SUPERCEDES INFO	VJB	5/24/00
4	8/28/03	CM	REMOVE CHECK VALVES, RELOCATE VALVE BOX	WB	10/15/03

APPROVALS

	INITIAL	DATE
DESIGN		
CONSTRUCTION		
INSPECTION		
OPERATIONS		
SUBMITTED	ML	10/23/95

REFERENCES: SUPERCEDES B-343 & B-344B 3 ORIG DWG 8/68
FILE I.D.: \\niagra apl\eng\std dwgs\b344.dgn
SCALE: NONE
DRAWN BY KER

RECOMMENDED Joseph D. Van Sichle 10/20/95
DIRECTOR OF ENGINEERING DATE

APPROVED G. Hoyte Rugge 10/20/95
CHIEF ENGINEER DATE

EASTERN MUNICIPAL WATER DISTRICT

EASTERN MUNICIPAL WATER DISTRICT
STANDARD DRAWING

2" COPPER SERVICE CONNECTION WITH METER

B-344 4

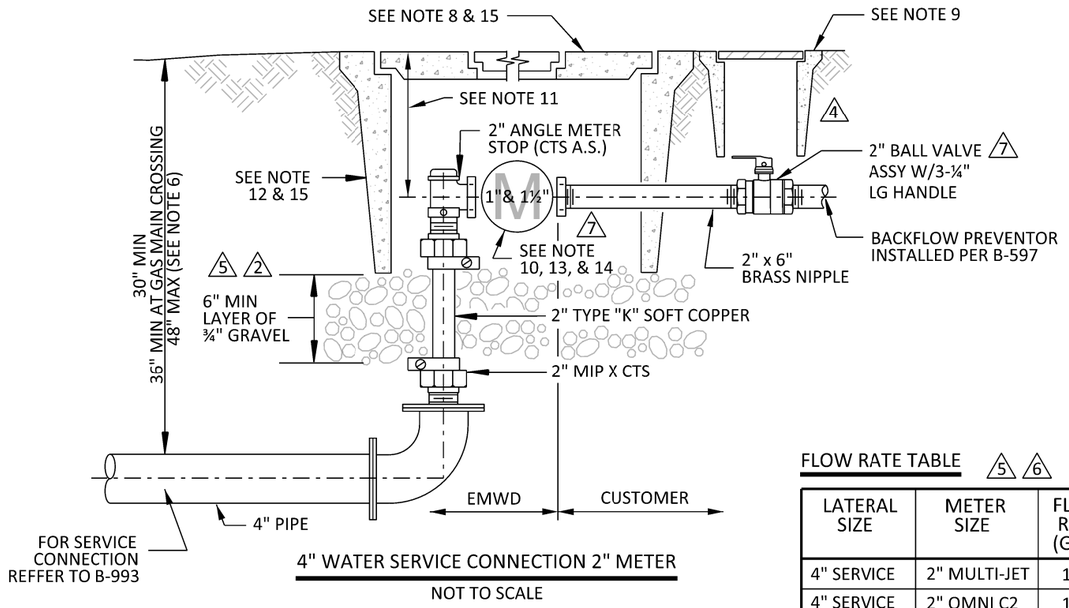

4" WATER SERVICE CONNECTION 2" METER

NOT TO SCALE

FLOW RATE TABLE △5 △6

LATERAL SIZE	METER SIZE	FLOW RATE (GPM)	VELOCITY (ft/s)	METER LENGTH
4" SERVICE	2" MULTI-JET	120	2.5	17"
4" SERVICE	2" OMNI C2	160	3.4	15¼"
4" SERVICE	2" OMNI T2	200	4.2	17"

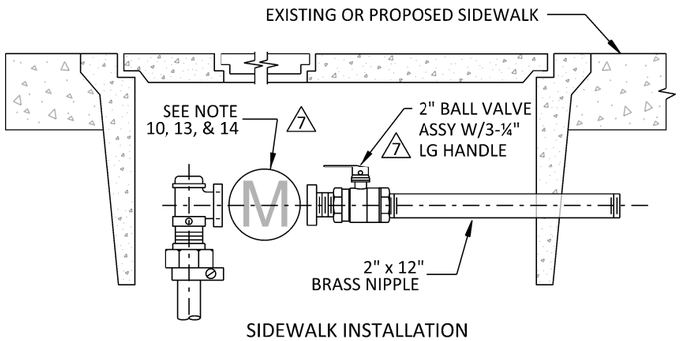

SIDEWALK INSTALLATION

NOT TO SCALE

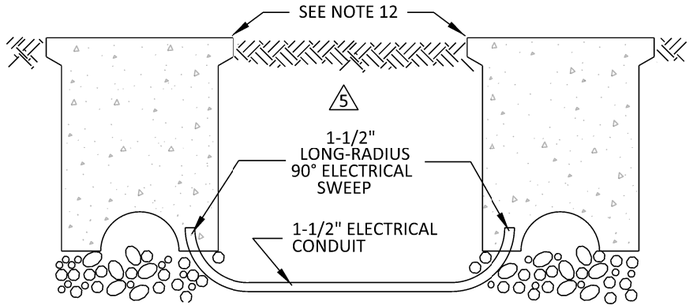

GENERAL NOTES △5

△7 1. ALL PIPE AND FITTINGS BETWEEN AND INCLUDING THE CORPORATION STOP AND BALL VALVE SHALL:
   A. BE MADE OF BRASS OR BRONZE;
   B. BE OF THE BANDED PATTERN;
   C. BE DESIGNED FOR A MIN OF 175 PSI (COLD) WATER WORKING PRESSURE.

△2 2. PRESSURE TEST PER EMWD SPECIFICATIONS.

3. ALL BARE IRON AND STEEL SHALL BE COATED WITH CEMENT MORTAR PER EMWD SPECIFICATIONS.

4. ALTERNATE MATERIALS MAY BE USED UPON APPROVAL BY THE EMWD ENGINEER.

5. CORPORATION STOP, FITTINGS, AND SERVICE LINE WITHIN 3 FEET OF SADDLE SHALL BE PRIMED AND WRAPPED WITH APPROVED COAL-TAR RESIN TAPE.

6. ALL SERVICE PIPE AND TUBING SHALL BE LAID ON A POSITIVE SLOPE UP FROM THE WATER MAIN TO THE METER. NO DIPS OR POCKETS IN THE LINE WILL BE PERMITTED. 36" COVER SHALL BE AT GAS MAIN CROSSINGS.

7. THREAD NOTATION THUS:
   IP = IRON PIPE THREAD.
△6 CS = CORPORATION STOP (MUELLER) THREAD.
   CT = COPPER SERVICE THREAD.
   PJ = PACKING JOINT.

△6 △2 8. METER BOX SHALL BE EMWD APPROVED 17" x 30" COMPLETE WITH COVER, TWO PEICE LID, AND ONE (1) - 7" EXTENSION WITH KNOCKOUTS AND AMR/AMI ANTENNA PORT (SEE NOTE F FOR SIDEWALK INSTALLATION).

△5 9. VALVE BOX SHALL BE EMWD APPROVED 8" DIA x 10" DEEP, COMPLETE WITH COVER AND ONE (1) - 6" EXTENSION.

△7 △5 10. WHEN METER IS FURNISHED BY OTHERS, USE 2" GALV NIPPLE COMBINED WITH 2" METER FLANGES ON EACH END (SEE FLOW RATE TABLE FOR METER LENGTHS). ANGLE METER STOP SHALL BE LOCKED CLOSED WITH LEAD SEAL AND THREE-STRAND SEALING WIRE.

△5 11. METER PORT HOLES TO BE INSTALLED 11" BELOW TOP OF METER BOX.

△7 △5 12. INSTALL 1-1/2" PVC SCH. 40 ELECTRICAL CONDUIT BETWEEN ALL METER BOXES THAT ARE LOCATED NEAR PROPERTY LINE WITHNIN 10' OF EA. OTHER. TAPE END OF SWEEPS PREVENTING DEBRIS FROM ENTERING CONDUIT. PLACE SWEEPS INSIDE AND AGAINST SIDE OF METER BOX.

△5 13. SYSTEMS WITH ONSITE PUMPS SHALL NOT EXCEED 5 FPS VELOCITY WITHIN THE SERVICE LATERAL. SYSTEMS WITHOUT PUMPS, SHALL NOT EXCEED 10 FPS.

△5 14. SEE MANUFACTURER'S SPECIFICATIONS FOR METER INSTALLATION.

△5 15. CONTRACTOR SHALL RETURN AFTER ROAD SHOULDER OR PARKWAY IS COMPLETE TO INSTALL METER BOX, AND SHALL BE RESPONSIBLE FOR COORDINATING WORK OF OTHER CONTRACTORS FOR SAFEGUARDING SERVICES UNTIL METER BOXES ARE SET.

PLACEMENT OF METER BOX

A. PLACE FRONT EDGE OF METER BOX 6" BEHIND EXISTING OR PROPOSED 6' OR 8" SIDEWALKS.

B. WHEN PROPOSED OR EXISTING SIDEWALK IS 12' WIDE, PLACE FRONT EDGE OF BOX 1.5' BEHIND CURB USING APPROPRIATE BOX.

C. WHEN NO SIDEWALK IS PROPOSED, PLACE FRONT EDGE OF BOX 7.5' BEHIND CURB.

D. WHEN NO CURBS ARE EXISTING OR TO BE INSTALLED UPON COMPLETION OF THE WATER SYSTEM, PLACE BACK EDGE OF METER BOX ON PROPERTY LINE.

E. MIN 5' SEPARATION BETWEEN SEWER LATERAL AND WATER SERVICE.

F. WHEN INSTALLED IN CONCRETE (SIDEWALK), USE 30" x 48" METER BOX WITH 2 PIECE LID ASSEMBLY WHICH INCLUDES CI READING LID.

REVISIONS

NO.	DATE	INITIAL	DESCRIPTION	APP'D	DATE
△7	12/21/16	GS	REVISED NOTE 1, 10, 12, ADDED NOTE REFERENCE TO DETAIL, BALL VALVE, AND UPDATED LOGO	AGA	12/30/16
△6	6/9/15	GS	UPDATED METER DATA TABLE AND NOTE #8	AGA	6/9/15
△5	12/13/14	GS	ADDED GRAVEL, EMWD-CUSTOMER DELINEATION, NOTES 12, 13, & 14, CONDUIT DETAIL, AND REVISED NAME	AGA	10/30/14

REFERENCES: SUPERCEDES B-343 & B-344B ORIG DWG 8/68 △3

FILE I.D.: \kauai\eng\std dwgs\B-344.dgn

SCALE: NONE

DRAWN BY: KER

APPROVALS

	INITIAL	DATE
DESIGN		
CONSTRUCTION		
INSPECTION		
OPERATIONS	ML	10/23/95
SUBMITTED		

RECOMMENDED Joseph D. Van Sickle 10/20/95
DIRECTOR OF ENGINEERING DATE

emwd EASTERN MUNICIPAL WATER DISTRICT

EASTERN MUNICIPAL WATER DISTRICT
STANDARD DRAWING

2" METER INSTALLATION △5

APPROVED G. Hooite Rugge 10/20/95
CHIEF ENGINEER DATE

B-344

△7

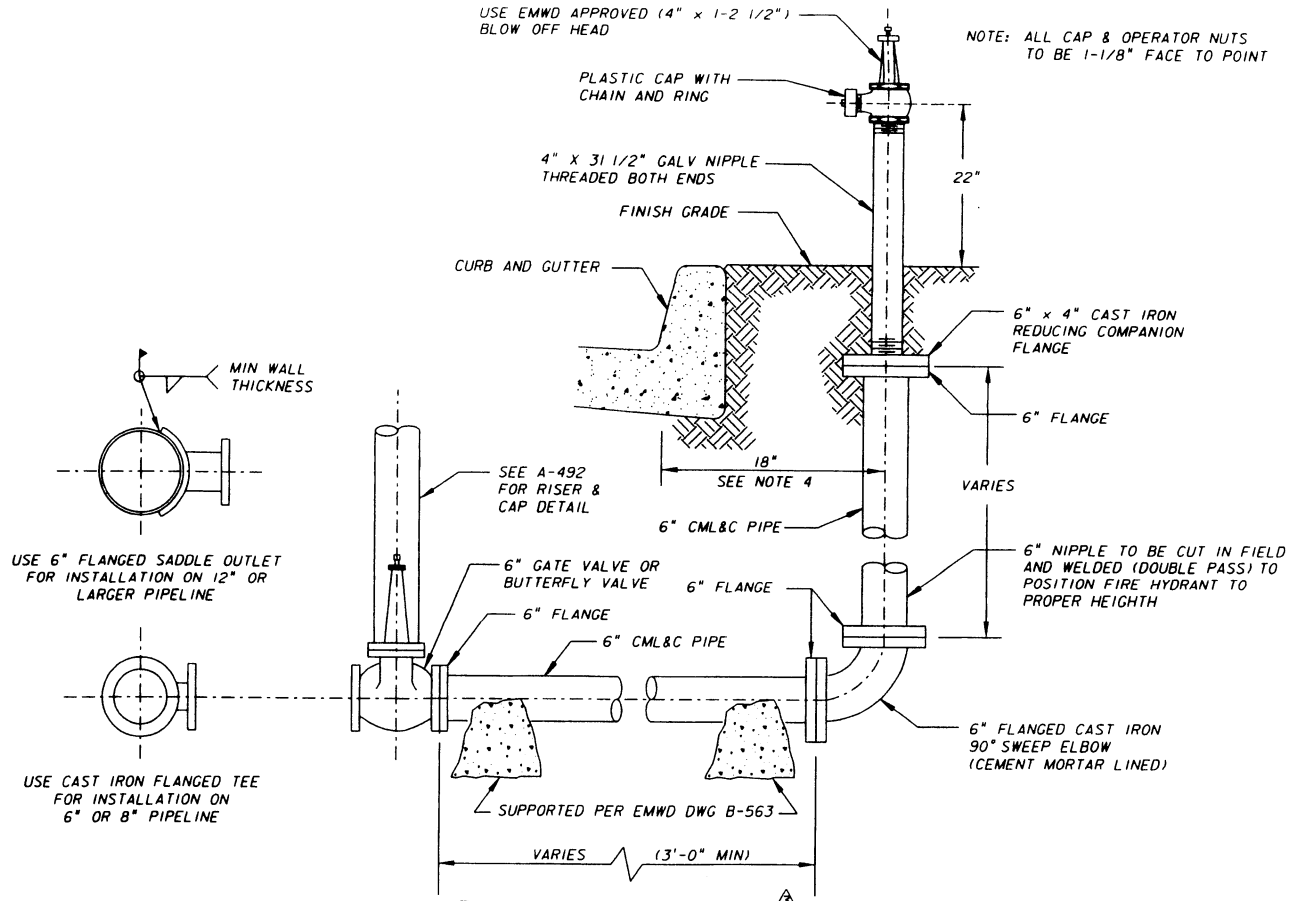

PIPELINE INSTALLATION

BLOW OFF ASSEMBLY △3

GENERAL NOTES △3

1. PAINTS:
   BLOWOFF TO BE PAINTED APPROVED YELLOW.
2. ALL FLANGES SHALL BE FULL WELDED (DOUBLE PASS) AND COATED IN THE FIELD AS DIRECTED BY THE ENGINEER PER NOTE 5.
3. ALTERNATE MATERIALS MAY BE USED WHEN SPECIFIED.
4. BLOW OFF LOCATIONS:
   A. BLOW OFF SHALL BE PLACED
      1. 1'-6" BEHIND CURB FACE WHEN THE WIDTH OF SIDEWALK IS 8' OR WIDER.
      2. 7'-6" BEHIND CURB FACE WHEN THE WIDTH OF SIDEWALK IS 6' WIDE.
      3. 7'-6" BEHIND CURB FACE WHEN THERE IS NO SIDEWALK.
      4. 1'-6" WITHIN ROAD RIGHT-OF-WAY WHEN NO CURBS OR SIDEWALKS ARE PROPOSED.
   B. BLOW OFF TO BE 1' BACK FROM INTERSECTION OF SIDEWALK WITH CORNER APRON.
   C. AT OTHER THAN STREET INTERSECTIONS BLOW OFF TO BE ON LOT LINES.
5. FIELD COATING FOR EXPOSED PIPE SHALL BE PER EMWD SPECIFICATIONS AND APPROVED MATERIALS.
△2 6. A MINIMUM 3 FT CLEAR SPACE SHALL BE MAINTAINED AROUND THE CIRCUMFERENCE OF THE BLOW OFF.

RIVERSIDE COUNTY WHARFHEAD FIRE HYDRANT

REVISIONS					
NO.	DATE	INITIAL	DESCRIPTION	APP'D	DATE
△1	4/6/93		REDRAWN W/CADD ON MYLAR	VJB	5/19/93
△2	5/18/00	GR	REVISED ALL FONT & ADDED NOTE 6	VJB	5/19/00
△3	10/14/05	cm	CHANGE F.H. TITLE & NOTES TO BLOWOFF	VJB	10/14/05

APPROVALS		
	INITIAL	DATE
DESIGN		
CONSTRUCTION		
INSPECTION		
OPERATIONS	PR	5/18/93
SUBMITTED	VJB	5/19/93

EASTERN MUNICIPAL WATER DISTRICT

EASTERN MUNICIPAL WATER DISTRICT
STANDARD DRAWING

6" x 1-2 1/2" BLOW-OFF INSTALLATION—STEEL PIPE △3

REFERENCES: SUPERCEDES B-349 ORIG DRAWN 5/69
FILE I.D.:kauai\eng\sld drwgs\b351.dgn

SCALE: NONE
DRAWN BY

RECOMMENDED Joseph D. Van Sickle, DIRECTOR OF ENGINEERING 6/3/93 DATE

APPROVED G. Hoote Rugge, CHIEF ENGINEER 7/2/93 DATE

B-351 △3

b351.dgn 10/14/2005 01:16:27 PM

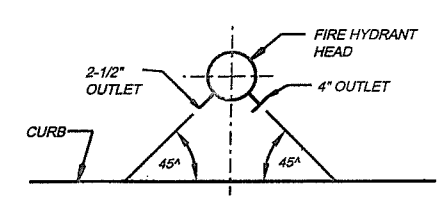

OUTLET ORIENTATION

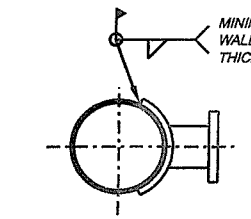

USE 6" FLANGED SADDLE OUTLET FOR INSTALLATION ON 12" OR LARGER PIPELINE

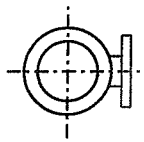

USE CAST IRON TEE FOR INSTALLATION ON 6" OR 8" PIPELINE

PIPELINE INSTALLATION

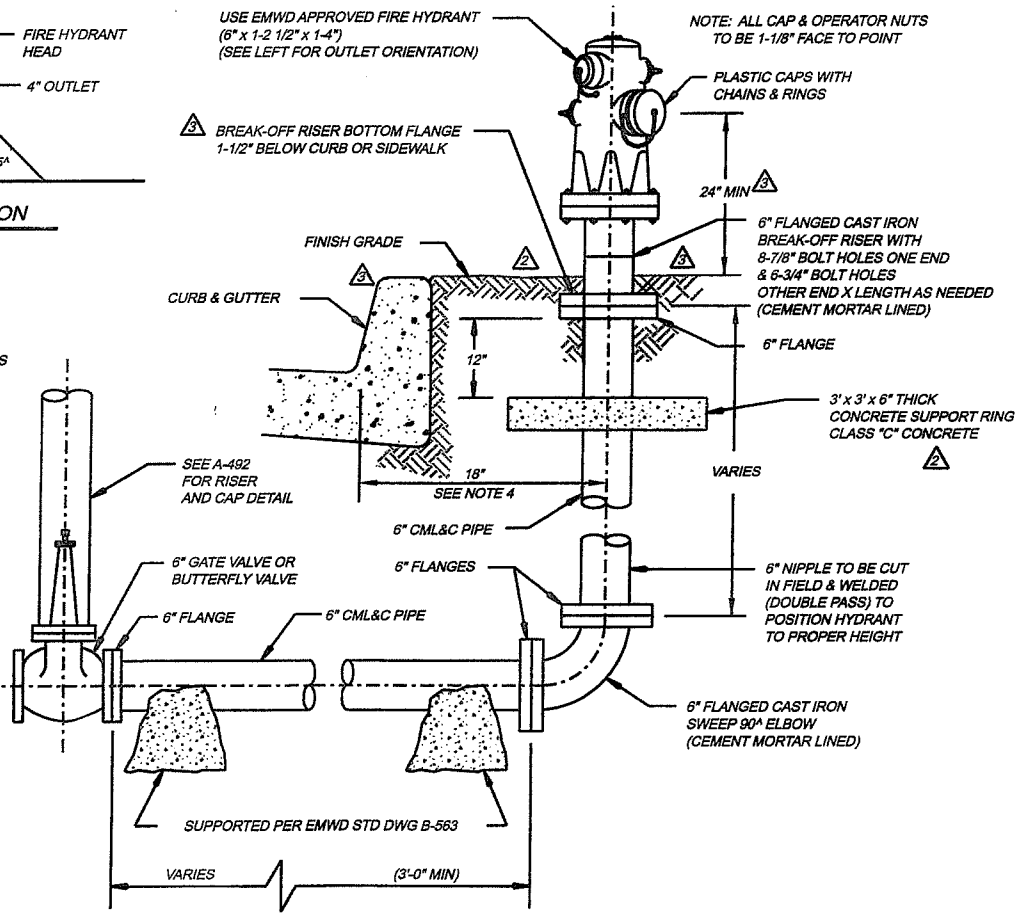

FIRE HYDRANT ASSEMBLY

GENERAL NOTES

2 1. PAINTS:
HYDRANT TOPS AND NOZZLE CAPS, 1500 gpm OR GREATER, TO BE LIGHT BLUE.
HYDRANT TOPS AND NOZZLE CAPS, 1000 gpm TO 1499 gpm, TO BE GREEN.
HYDRANT TOPS AND NOZZLE CAPS, 500 gpm TO 999 gpm, TO BE ORANGE.
HYDRANT TOPS AND NOZZLE CAPS, LESS THAN 500 gpm, TO BE RED.

2. ALL FLANGES SHALL BE FULL WELDED (DOUBLE PASS) AND COATED IN THE FIELD AS DIRECTED BY ENGINEER PER NOTE 5.

3. ALTERNATE MATERIALS MAY BE USED WHEN SPECIFIED.

4. FIRE HYDRANT LOCATIONS:
A. FIRE HYDRANT SHALL BE PLACED
1. 1'-6" BEHIND CURB FACE WHEN WIDTH OF SIDEWALK IS 8' OR WIDER.
2. 7'-6" BEHIND CURB FACE WHEN WIDTH OF SIDEWALK IS 6' WIDE.
3. 7'-6" BEHIND CURB FACE WHEN THERE IS NO SIDEWALK.
2 4. 1'-6" WITHIN ROAD RIGHT-OF-WAY WHEN NO CURBS OR SIDEWALKS ARE PROPOSED.
B. FIRE HYDRANT TO BE 1' BACK FROM INTERSECTION OF SIDEWALK WITH CORNER APRON.
C. AT OTHER THAN STREET INTERSECTIONS FIRE HYDRANTS TO BE ON LOT LINES.

5. FIELD COATING FOR EXPOSED PIPE SHALL BE PER EMWD SPECS AND APPROVED MATERIALS.

2 6. A MINIMUM 3 FT CLEAR SPACE SHALL BE MAINTAINED AROUND THE CIRCUMFERENCE OF THE FIRE HYDRANT.

RIVERSIDE COUNTY STANDARD FIRE HYDRANT

REVISIONS					
NO.	DATE	INITIAL	DESCRIPTION	APP'D	DATE
1	4/1/93		REDRAWN BY CADD ON MYLAR	VJB	7/2/93
2	5/18/00	GR	REV NOTES 1,4,6,ADD CONC SUPPORT& DIMS	VJB	5/22/00
3	10/2/06	RE	REVISED F.H. DIMENSION, GRADE & BREAK-OFF NOTES	JM	10/10/06

APPROVALS		
	INITIAL	DATE
DESIGN		
CONSTRUCTION		
INSPECTION		
OPERATIONS	PR	5/18/93
SUBMITTED	VJB	5/19/93

EASTERN MUNICIPAL WATER DISTRICT

EASTERN MUNICIPAL WATER DISTRICT
STANDARD DRAWING

6" x 1-2 1/2" x 1-4" FIRE HYDRANT INSTALLATION—STEEL PIPE

REFERENCES: ORIG DRAWN BY McM 5/69

FILE I.D.: KAUAI/ENGINEERING/STD/DWG

SCALE: NONE

DRAWN BY

RECOMMENDED Joseph D. Van Sickle 6/3/93
DIRECTOR OF ENGINEERING DATE

APPROVED G. Hoote Rugge 7/2/93
CHIEF ENGINEER DATE

B-356 3

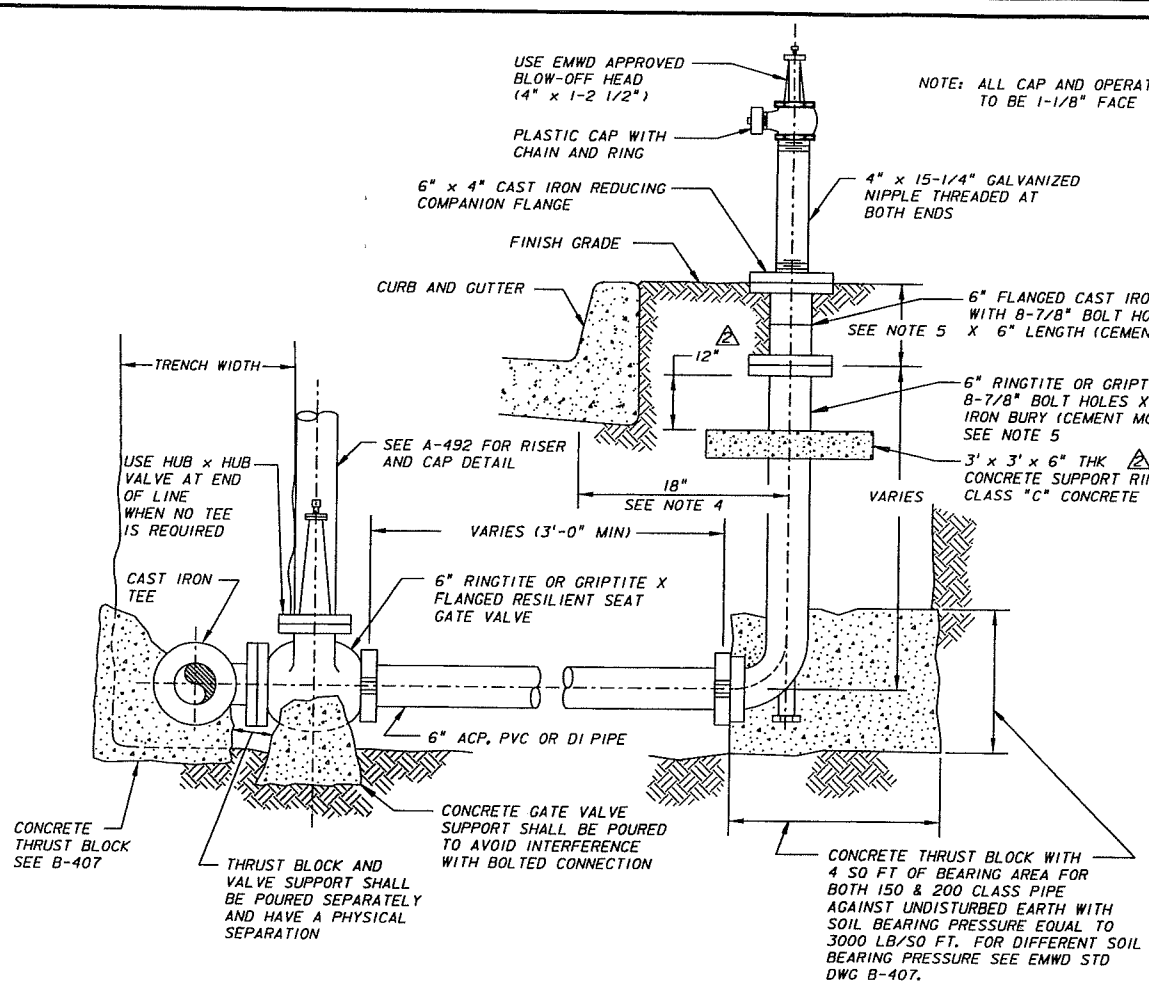

GENERAL NOTES 3

2 1. PAINTS:
BLOW-OFF TO BE PAINTED APPROVED YELLOW.

2. USE THRUST BLOCKS PER B-407 FOR ACP. USE RESTRAINED JOINTS PER B-663 FOR PVC AND DUCTILE IRON. CONCRETE FOR THRUST BLOCKS AND SUPPORTS TO BE CLASS "C" (2000 PSI CONCRETE.

2 3. ALTERNATE MATERIALS MAY BE USED WHEN SPECIFIED.

4. BLOW-OFF LOCATIONS:
2 A. BLOW-OFF SHALL BE PLACED
1. 1'-6" BEHIND CURB FACE WHEN THE WIDTH OF SIDEWALK IS 8' OR WIDER.
2. 7'-6" BEHIND CURB FACE WHEN THE WIDTH OF SIDEWALK IS 6' WIDE.
3. 7'-6" BEHIND CURB FACE WHEN THERE IS NO SIDEWALK.
2 4. 1'-6" WITHIN ROAD RIGHT-OF-WAY WHEN NO CURBS OR SIDEWALKS ARE PROPOSED.
B. BLOW-OFF TO BE 1' BACK FROM INTERSECTION OF SIDEWALK WITH CORNER APRON.
C. AT OTHER THAN STREET INTERSECTIONS BLOW-OFF TO BE ON LOT LINES.

5. LENGTH OF BREAK-OFF RISER TO BE DETERMINED BY THE DIFFERENCE IN ELEVATION BETWEEN THE CENTER GRADE OF THE PIPELINE OUTLET AND THE TOP OF THE CURB, LESS THE LENGTH FOR THE BURY. FOR PLACEMENT UNDER NOTE 4B ABOVE, ADD 2" TO ALLOW FOR SIDEWALK SLOPE.

6. FIELD COATING FOR EXPOSED PIPE SHALL BE PER EMWD SPECIFICATIONS AND APPROVED MATERIALS.

2 7. A MINIMUM 3 FT CLEAR SPACE SHALL BE MAINTAINED AROUND THE CIRCUMFERENCE OF THE BLOW-OFF.

REVISIONS					
NO.	DATE	INITIAL	DESCRIPTION	APP'D	DATE
1	2/10/93		REDRAWN W/CADD ON MYLAR	VJB	5/19/93
2	4/12/00	GR	REV NOTES 1-4,8, ADD CONC SUPPORT RING	VJB	5/19/00
3	3/6/03	CM	CHANGED TITLE TO BLOW-OFF	WB	10/15/03

APPROVALS	INITIAL	DATE
DESIGN		
CONSTRUCTION		
INSPECTION		
OPERATIONS	PR	5/18/93
SUBMITTED	VJB	5/19/93

REFERENCES: SUPERCEDES B-350 ORIG DRAWN 5/69
FILE I.D.: \\niagra apt\eng\std dwgs\b357.dgn
SCALE: NONE
DRAWN BY

RECOMMENDED Joseph D. Van Sickle 6/1/93
DIRECTOR OF ENGINEERING DATE

EASTERN MUNICIPAL WATER DISTRICT

RIVERSIDE COUNTY WHARFHEAD FIRE HYDRANT
EASTERN MUNICIPAL WATER DISTRICT
STANDARD DRAWING

6" x 1-2 1/2" BLOW-OFF INSTALLATION – AC, PVC, DI PIPE 3

APPROVED G. Hoote Rugge 7/2/93
CHIEF ENGINEER DATE

B-357 3

D:\REVb357.dgn 09/30/03 01:58:09 PM

OUTLET ORIENTATION

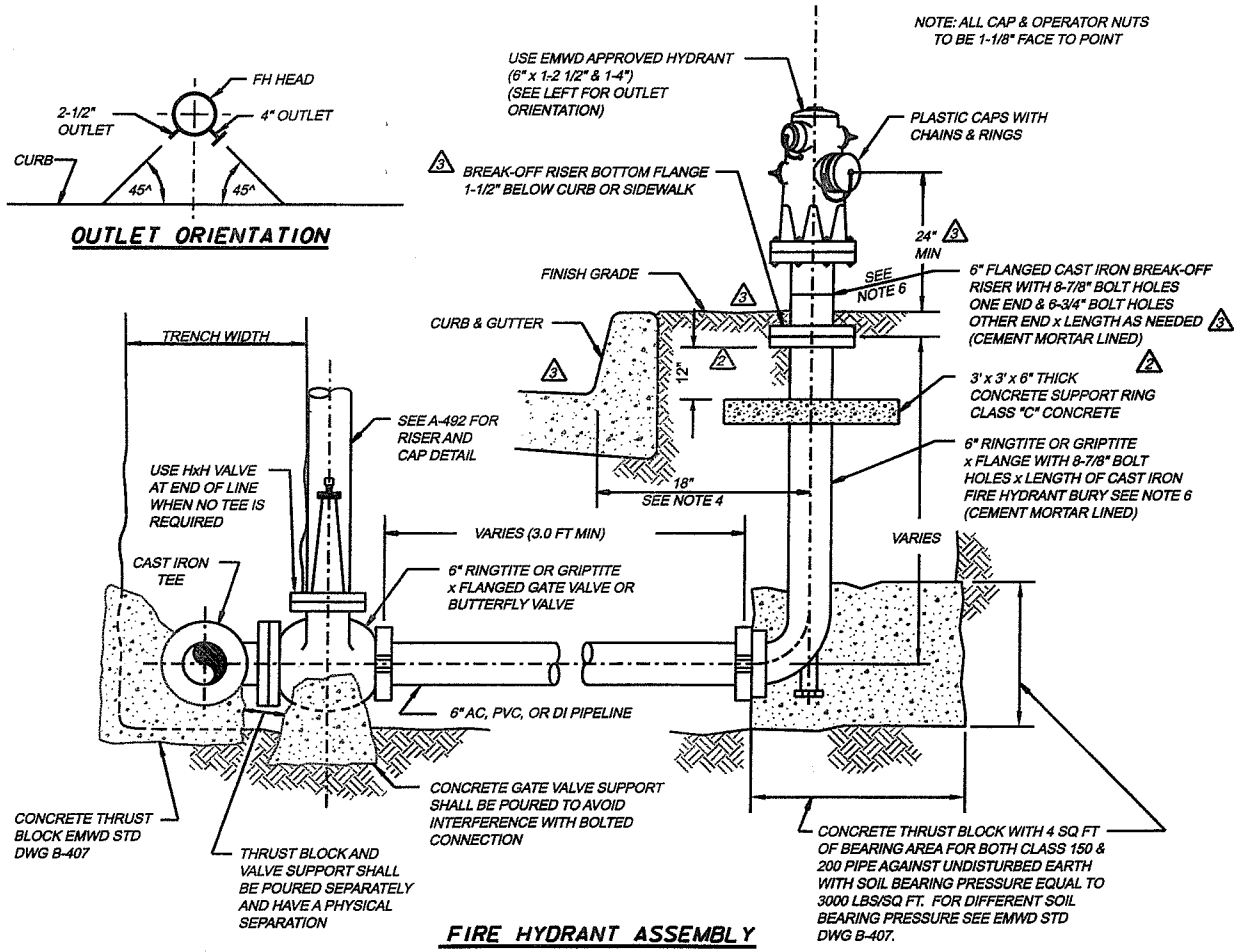

FIRE HYDRANT ASSEMBLY

GENERAL NOTES

2 1. PAINTS:
HYDRANT TOPS AND NOZZLE CAPS, 1500 GPM OR GREATER, TO BE LIGHT BLUE.
HYDRANT TOPS AND NOZZLE CAPS, 1000 GPM TO 1499 GPM, TO BE GREEN.
HYDRANT TOPS AND NOZZLE CAPS, 500 GPM TO 999 GPM, TO BE ORANGE.
HYDRANT TOPS AND NOZZLE CAPS, LESS THAN 500 GPM, TO BE RED.

2 2. USE THRUST BLOCKS PER B-407 FOR ACP. USE RESTRAINED JOINTS PER B-663 FOR PVC AND DUCTILE IRON. CONCRETE FOR THRUST BLOCKS AND SUPPORTS TO BE CLASS "C" (2000 PSI) CONCRETE.

3. ALTERNATE MATERIALS MAY BE USED WHEN SPECIFIED.

4. FIRE HYDRANT LOCATIONS:
A. FIRE HYDRANT SHALL BE PLACED:
1. 1'6" BEHIND CURB FACE WHEN WIDTH OF SIDEWALK IS 8' OR WIDER.
2. 7'6" BEHIND CURB FACE WHEN WIDTH OF SIDEWALK IS 6' WIDE.
3. 7' 6" BEHIND CURB FACE WHEN THERE IS NO SIDEWALK.
2 4. 1'-6" WITHIN ROAD RIGHT-OF-WAY WHEN NO CURBS OR SIDEWALKS ARE PROPOSED.
B. FIRE HYDRANT TO BE 1 FT BACK FROM INTERSECTION OF SIDEWALK WITH CORNER APRON.
C. AT OTHER THAN STREET INTERSECTIONS FIRE HYDRANTS TO BE ON LOT LINES.

5. FIELD COATING FOR EXPOSED PIPE SHALL BE PER EMWD SPECIFICATIONS AND APPROVED MATERIALS.

6. LENGTH OF BREAK-OFF RISER TO BE DETERMINED BY THE DIFFERENCE IN ELEVATION BETWEEN THE CENTER GRADE OF THE PIPELINE OUTLET AND THE TOP OF THE CURB, LESS THE LENGTH FOR THE FIRE HYDRANT BURY. IF THE BREAK-OFF 3 RISER EXCEEDS 24", USE THE NEXT ONE FOOT LONGER BURY. UNDER NOTE 4B ABOVE, ADD 2" RISER TO ALLOW FOR SIDEWALK SLOPE.

2 7. A MINIMUM OF 3 FT CLEAR SPACE SHALL BE MAINTAINED AROUND THE CIRCUMFERENCE OF THE FIRE HYDRANT.

RIVERSIDE COUNTY STANDARD FIRE HYDRANT

REVISIONS					
NO.	DATE	INITIAL	DESCRIPTION	APP'D	DATE
1	2/10/93		REDRAWN W/CADD ON MYLAR	VJB	7/2/93
2	5/18/00	GR	REV NOTES 1,2,4,7, ADD SUPPORT RING & DIMS	VJB	5/19/00
3	10/2/06	RE	REVISED F.H. DIMENSION, GRADE & BREAK-OFF NOTES	KM	10/10/06

APPROVALS	INITIAL	DATE
DESIGN		
CONSTRUCTION		
INSPECTION		
OPERATIONS	PR	5/18/93
SUBMITTED	VJB	5/19/93

EASTERN MUNICIPAL WATER DISTRICT

EASTERN MUNICIPAL WATER DISTRICT
STANDARD DRAWING

6" x 1-2 1/2" x 1-4" FIRE HYDRANT INSTALLATION—AC, PVC, DI PIPE

REFERENCES: ORIG DRAWN 5/69
FILE I.D.: KAUAI/ENGINEERING/STD/DWG

SCALE: NONE
DRAWN BY

RECOMMENDED Joseph D. Van Sickle 6/1/93
DIRECTOR OF ENGINEERING — DATE

APPROVED G. Hooita Rugge 7/2/93
CHIEF ENGINEER — DATE

B-362 3

OUTLET ORIENTATION

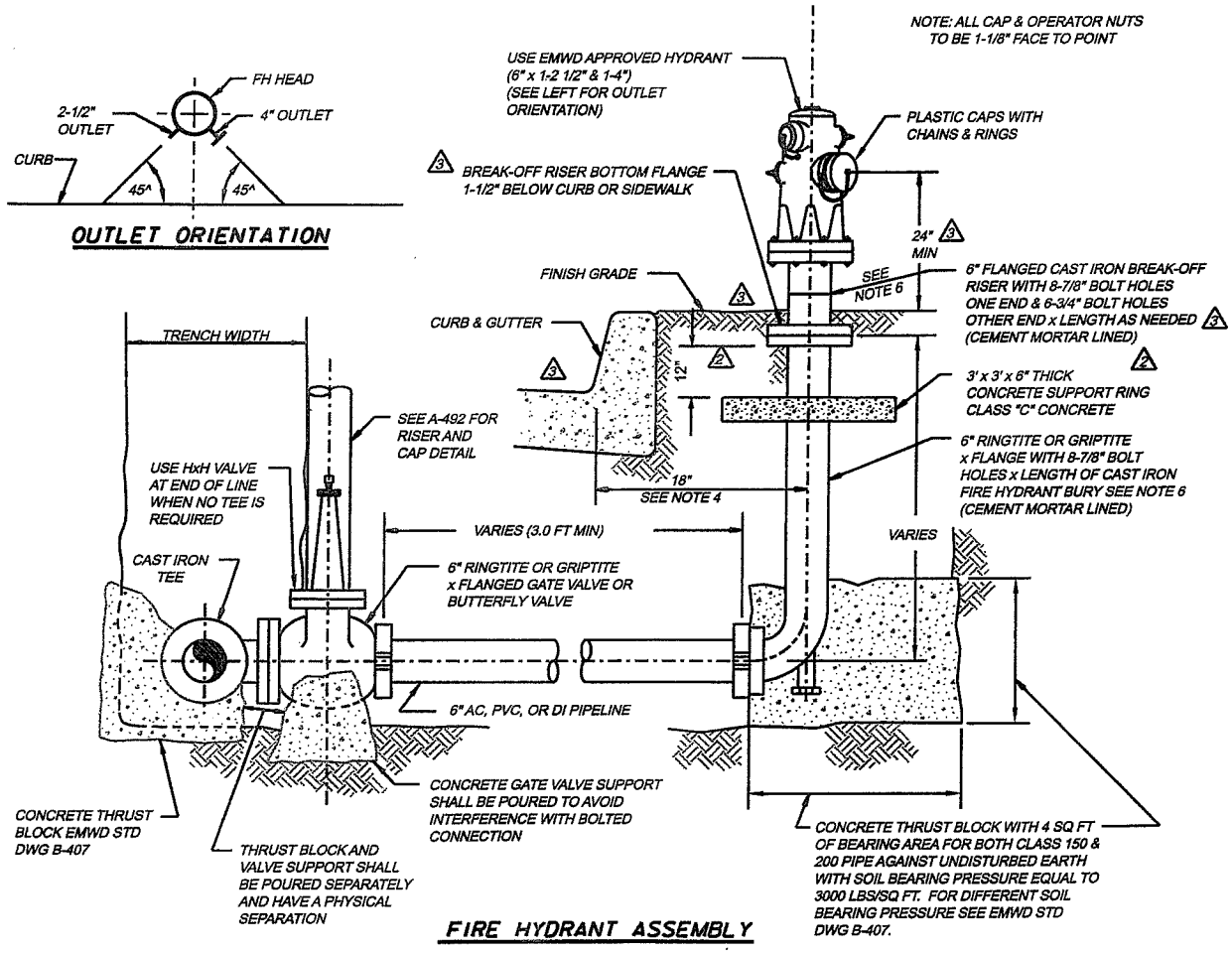

FIRE HYDRANT ASSEMBLY

GENERAL NOTES

2 1. PAINTS:
HYDRANT TOPS AND NOZZLE CAPS, 1500 GPM OR GREATER, TO BE LIGHT BLUE.
HYDRANT TOPS AND NOZZLE CAPS, 1000 GPM TO 1499 GPM, TO BE GREEN.
HYDRANT TOPS AND NOZZLE CAPS, 500 GPM TO 999 GPM, TO BE ORANGE.
HYDRANT TOPS AND NOZZLE CAPS, LESS THAN 500 GPM, TO BE RED.

2 2. USE THRUST BLOCKS PER B-407 FOR ACP. USE RESTRAINED JOINTS PER B-663 FOR PVC AND DUCTILE IRON. CONCRETE FOR THRUST BLOCKS AND SUPPORTS TO BE CLASS "C" (2000 PSI) CONCRETE.

3. ALTERNATE MATERIALS MAY BE USED WHEN SPECIFIED.

4. FIRE HYDRANT LOCATIONS:
A. FIRE HYDRANT SHALL BE PLACED:
1. 1'6" BEHIND CURB FACE WHEN WIDTH OF SIDEWALK IS 8' OR WIDER.
2. 7'6" BEHIND CURB FACE WHEN WIDTH OF SIDEWALK IS 6' WIDE.
3. 7' 6" BEHIND CURB FACE WHEN THERE IS NO SIDEWALK.
2 4. 1'-6" WITHIN ROAD RIGHT-OF-WAY WHEN NO CURBS OR SIDEWALKS ARE PROPOSED.
B. FIRE HYDRANT TO BE 1 FT BACK FROM INTERSECTION OF SIDEWALK WITH CORNER APRON.
C. AT OTHER THAN STREET INTERSECTIONS FIRE HYDRANTS TO BE ON LOT LINES.

5. FIELD COATING FOR EXPOSED PIPE SHALL BE PER EMWD SPECIFICATIONS AND APPROVED MATERIALS.

6. LENGTH OF BREAK-OFF RISER TO BE DETERMINED BY THE DIFFERENCE IN ELEVATION BETWEEN THE CENTER GRADE OF THE PIPELINE OUTLET AND THE TOP OF THE CURB, LESS THE LENGTH FOR THE FIRE HYDRANT BURY. IF THE BREAK-OFF 3 RISER EXCEEDS 24", USE THE NEXT ONE FOOT LONGER BURY. UNDER NOTE 4B ABOVE, ADD 2" RISER TO ALLOW FOR SIDEWALK SLOPE.

2 7. A MINIMUM OF 3 FT CLEAR SPACE SHALL BE MAINTAINED AROUND THE CIRCUMFERENCE OF THE FIRE HYDRANT.

RIVERSIDE COUNTY STANDARD FIRE HYDRANT

REVISIONS					
NO.	DATE	INITIAL	DESCRIPTION	APP'D	DATE
1	2/10/93		REDRAWN W/CADD ON MYLAR	VJB	7/2/93
2	5/18/00	GR	REV NOTES 1,2,4,7, ADD SUPPORT RING & DIMS	VJB	5/19/00
3	10/2/06	RE	REVISED F.H. DIMENSION, GRADE & BREAK-OFF NOTES	KM	10/10/06

APPROVALS		
	INITIAL	DATE
DESIGN		
CONSTRUCTION		
INSPECTION		
OPERATIONS	PR	5/18/93
SUBMITTED	VJB	5/19/93

EASTERN MUNICIPAL WATER DISTRICT

EASTERN MUNICIPAL WATER DISTRICT
STANDARD DRAWING

6" x 1-2 1/2" x 1-4" FIRE HYDRANT INSTALLATION—AC, PVC, DI PIPE

REFERENCES: ORIG DRAWN 5/69
FILE I.D.: KAUAI/ENGINEERING/STD/DWG

SCALE: NONE
DRAWN BY

RECOMMENDED Joseph D. Van Sickle DIRECTOR OF ENGINEERING 6/1/93 DATE

APPROVED G. Hooita Rugge CHIEF ENGINEER 7/2/93 DATE

B-362 3

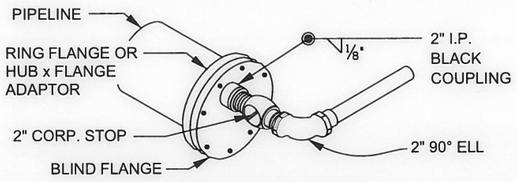

NOTE: BURN HOLE THRU BLIND FLANGE (TOP OF HOLE TO MEET SOFFIT OF PIPE)

TYPE "D"
TEMPORARY END OF LINE

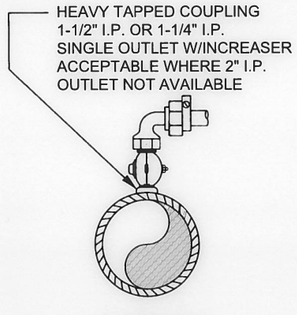

TYPE "C"
A.C.PIPE

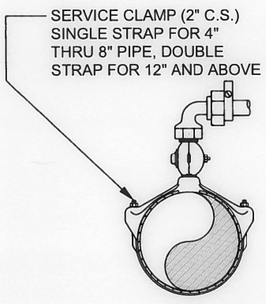

TYPE "B"
A.C.-D.I.-P.V.C. PIPE

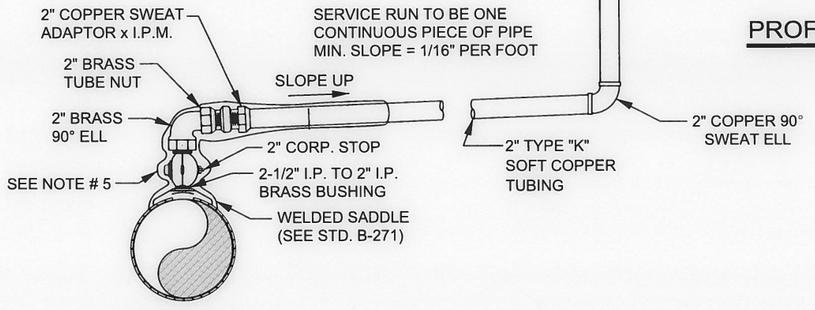

TYPE "A"
STEEL PIPE

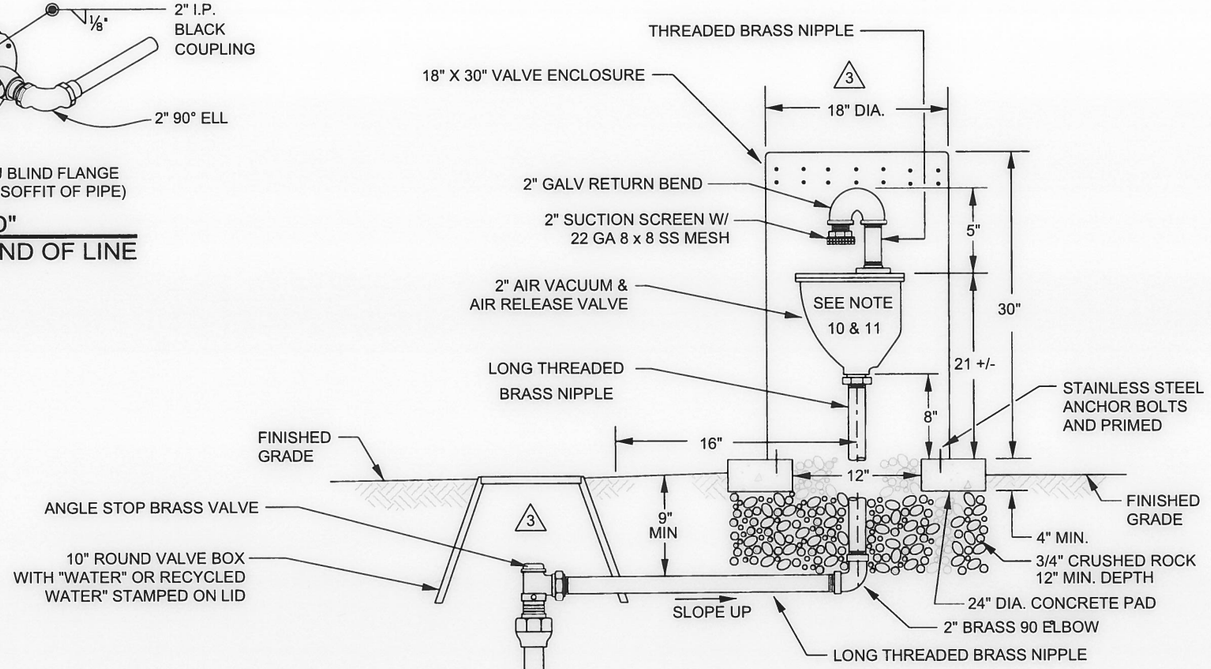

PROFILE VIEW

NOTES:

1. ALL FITTINGS BETWEEN THE CORP. STOP AND AIR VALVE SHALL BE:
   A. MADE OF BRASS OR BRONZE;
   B. MADE OF THE BANDED PATTERN;
   C. DESIGNED FOR A MIN. OF 175 PSI (COLD) WATER WORKING PRESSURE
2. PRESSURE TEST PER EMWD SPECIFICATIONS.
3. ALL MATERIALS SHALL BE PER EMWD APPROVED MATERIAL LIST.
4. ALTERNATE MATERIALS MAY BE USED UPON APPROVAL BY EMWD.
5. CORPORATION STOP AND FITTINGS AT THE PIPELINE SHALL BE PRIMED AND WRAPPED WITH APPROVED COAL TAR RESIN TAPE.
6. ALL SERVICE PIPE AND TUBING SHALL BE LAID ON A CONSTANT SLOPE UP FROM THE WATER MAIN TO THE AV & AR. NO DIPS OR POCKETS WILL BE PERMITTED.
7. THREAD NOTATION SHOWN THUS:
   IP = IRON PIPE THREAD;
   CS = CORPORATION STOP (MUELLER) THREAD;
   PJ = PACK JOINT.
3. 8. DOMESTIC WATER VALVE ENCLOSURE TO BE APPROVED COLOR TAN WITH A SINGLE COLOR STRIPE NEAR THE TOP; POTABLE-BLUE STENCIL "EMWD WATER," OR RECYCLED-PURPLE STENCIL "EMWD RECYCLED WATER".
9. PLACEMENT OF CONCRETE PAD:
   A. PLACE FRONT OF CONCRETE PAD 6" MAX BEHIND EXISTING OR PROPOSED 6' OR 8' SIDEWALKS.
3. B. WHEN PROPOSED OR EXISTING SIDEWALK IS 12' WIDE, PLACE FRONT EDGE OF BOX 6"MAXIMUM BEHIND CURB.
   C. WHEN NO SIDEWALK IS PROPOSED, PLACE FRONT EDGE OF CONCRETE PAD 6.5' BEHIND CURB FACE.
   D. WHEN NO CURBS ARE EXISTING OR PROPOSED, PLACE BACK EDGE OF CONCRETE PAD ON PROPERTY LINE.
3. 10. ALL RSGV AND AV & AR RUBBER COMPONENTS SHALL BE EPDM.
3. 11. RECYCLED WATER AV & AR BODIES SHALL BE PAINTED PANTONE 522C.

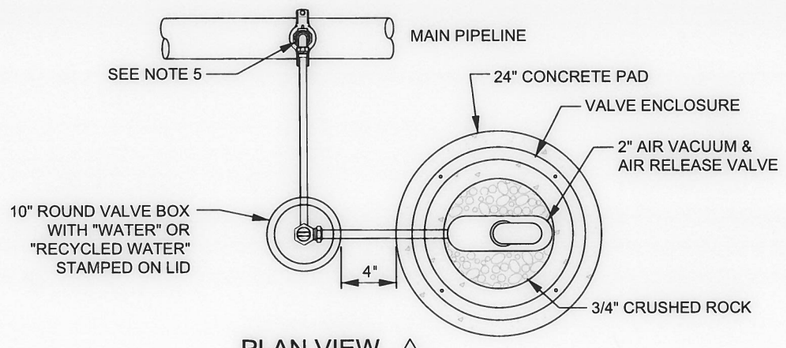

PLAN VIEW 3

REVISIONS					
NO.	DATE	INITIAL	DESCRIPTION	APP'D	DATE
3	7/11/13	GS	REMOVED BELOW GRADE INSTALLATION, ADDED ENCLOSURE, PLAN VIEW FOR ABOVE GRADE INSTALLATION, AND NOTE 3 & B	AGA	7/11/13
2	8/29/03	CM	REVISED DIA. & GA. OF RISER	VJB	10/15/03
1	4/10/97	KER	REDRAWN W/ CADD ON MYLAR & ADD RISER DET.	VJB	4/28/97

APPROVALS		
	INITIAL	DATE
DESIGN	LM	1/28/10
CONSTRUCTION		
INSPECTION		
OPERATIONS		
SUBMITTED		

EASTERN MUNICIPAL WATER DISTRICT

EASTERN MUNICIPAL WATER DISTRICT

EASTERN MUNICIPAL WATER DISTRICT
STANDARD DRAWING

2" AIR VALVE INSTALLATION

REFERENCES: INCORPORATES B-386
FILE I.D.: \kauai\eng\std dwgs\b367.dgn
SCALE: NONE
DRAWN BY: KER

RECOMMENDED D. C. Stewart 1/10
DIRECTOR OF ENGINEERING DATE

APPROVED Doyle F. Boen 1/10
CHIEF ENGINEER DATE

B-367

3

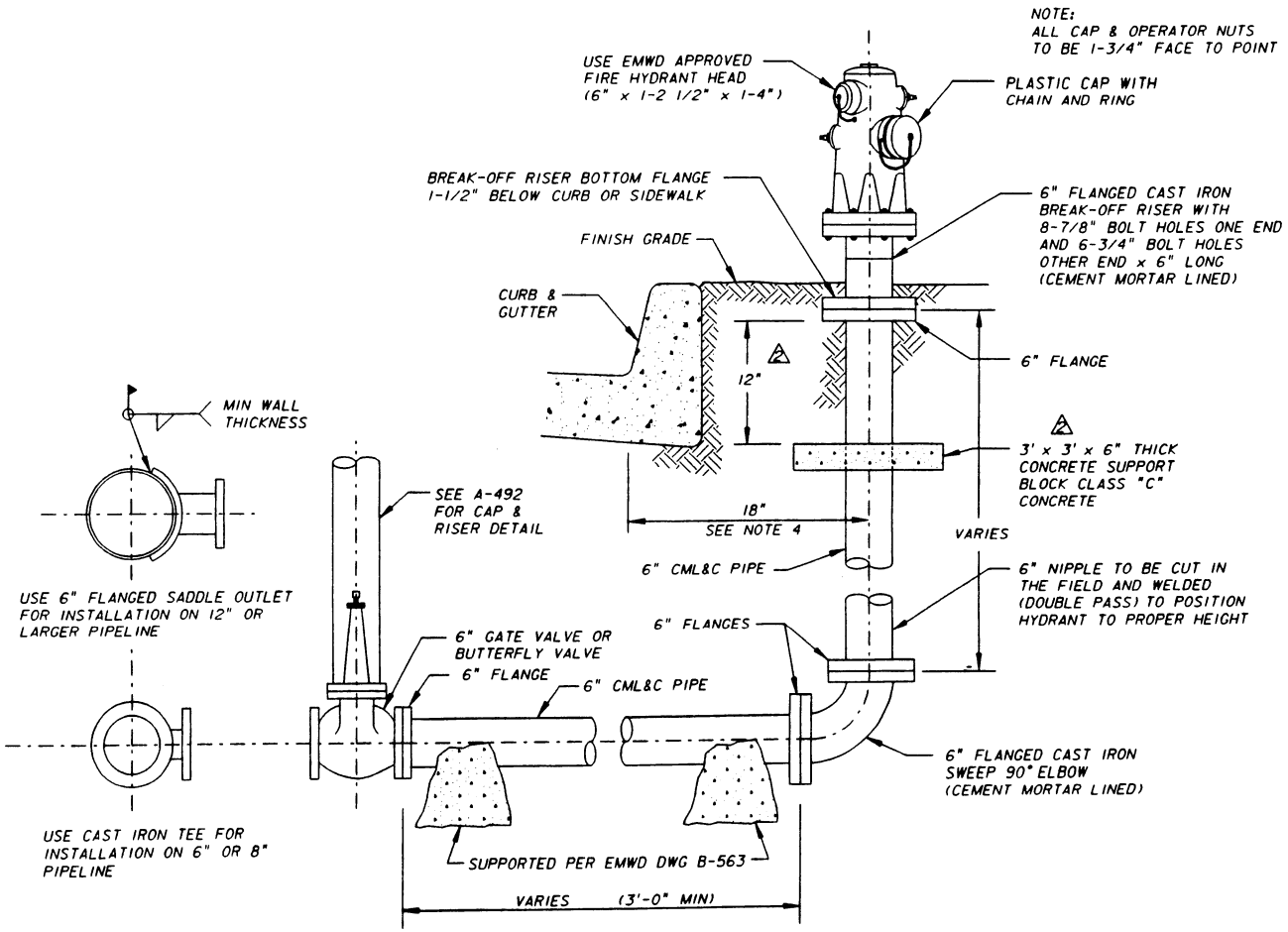

PIPELINE INSTALLATION

FIRE HYDRANT ASSEMBLY

GENERAL NOTES

1. FIRE HYDRANT TO BE PAINTED WITH REFLECTIVE SCOTCHLITE S-368 OR S-370, OR APPROVED EQUAL.
2. ALL FLANGES SHALL BE FULL WELDED (DOUBLE PASS) AND COATED IN THE FIELD AS DIRECTED BY THE ENGINEER PER NOTE 6.
3. ALTERNATE MATERIALS MAY BE USED WHEN SPECIFIED.
4. FIRE HYDRANT PLACEMENT:
   A. CURB AND SIDEWALK SEPARATED: FIRE HYDRANT TO BE 18" BEHIND CURB FACE, AS SHOWN.
   B. CURB AND SIDEWALK ADJACENT: FIRE HYDRANT TO BE 18" BEHIND SIDEWALK, BUT NOT LESS THAN 8" WITHIN THE ROAD RIGHT-OF-WAY.
   C. SIDEWALK FULL WIDTH OF RIGHT-OF-WAY: FIRE HYDRANT TO BE 18" BEHIND CURB.
   D. NO CURBS OR SIDEWALKS PROPOSED: FIRE HYDRANT TO BE 18" WITHIN THE ROAD RIGHT-OF-WAY.
5. FIRE HYDRANT LOCATION:
   A. STREET INTERSECTIONS: FIRE HYDRANT TO BE 5' PAST THE CURB RETURN.
   B. OTHER THAN STREET INTERSECTIONS: FIRE HYDRANT TO BE ON LOT LINE AS SHOWN ON PLANS.
6. ALL BURIED BARE METAL SHALL BE FIELD COATED PER EMWD SPECIFICATIONS AND APPROVED MATERIALS.
7. ALL FIRE HYDRANTS TO HAVE "BLUE DOT" MARKER PER CITY OF HEMET STD W-700A ("STD").

APPROVED: Bernard Phillips DATE: 5/5/93
CITY OF HEMET

REVISIONS					
NO.	DATE	INITIAL	DESCRIPTION	APP'D	DATE
1	4/7/93		REDRAWN W/CADD ON MYLAR	VJB	5/19/93
2	5/18/00	GR	REV ALL FONT, ADD CONC SUPPORT & DIM	VJB	5/19/00

APPROVALS		
	INITIAL	DATE
DESIGN		
CONSTRUCTION		
INSPECTION		
OPERATIONS	DR	5/12/93
SUBMITTED	VJB	5/19/93

EASTERN MUNICIPAL WATER DISTRICT

REFERENCES: ORIG DRAWN BY RAH 5/71
FILE I.D.: D_STANDARDS/B387.DGN

SCALE: NONE
DRAWN BY

RECOMMENDED Joseph D. Van Sichle 6/3/93
DIRECTOR OF ENGINEERING DATE

EASTERN MUNICIPAL WATER DISTRICT
STANDARD DRAWING

6" x 1-2 1/2" x 1-4" FIRE HYDRANT INSTALLATION CITY OF HEMET - STEEL PIPE

APPROVED G. Hooite Rugge 7/2/93
CHIEF ENGINEER DATE

B-387 2

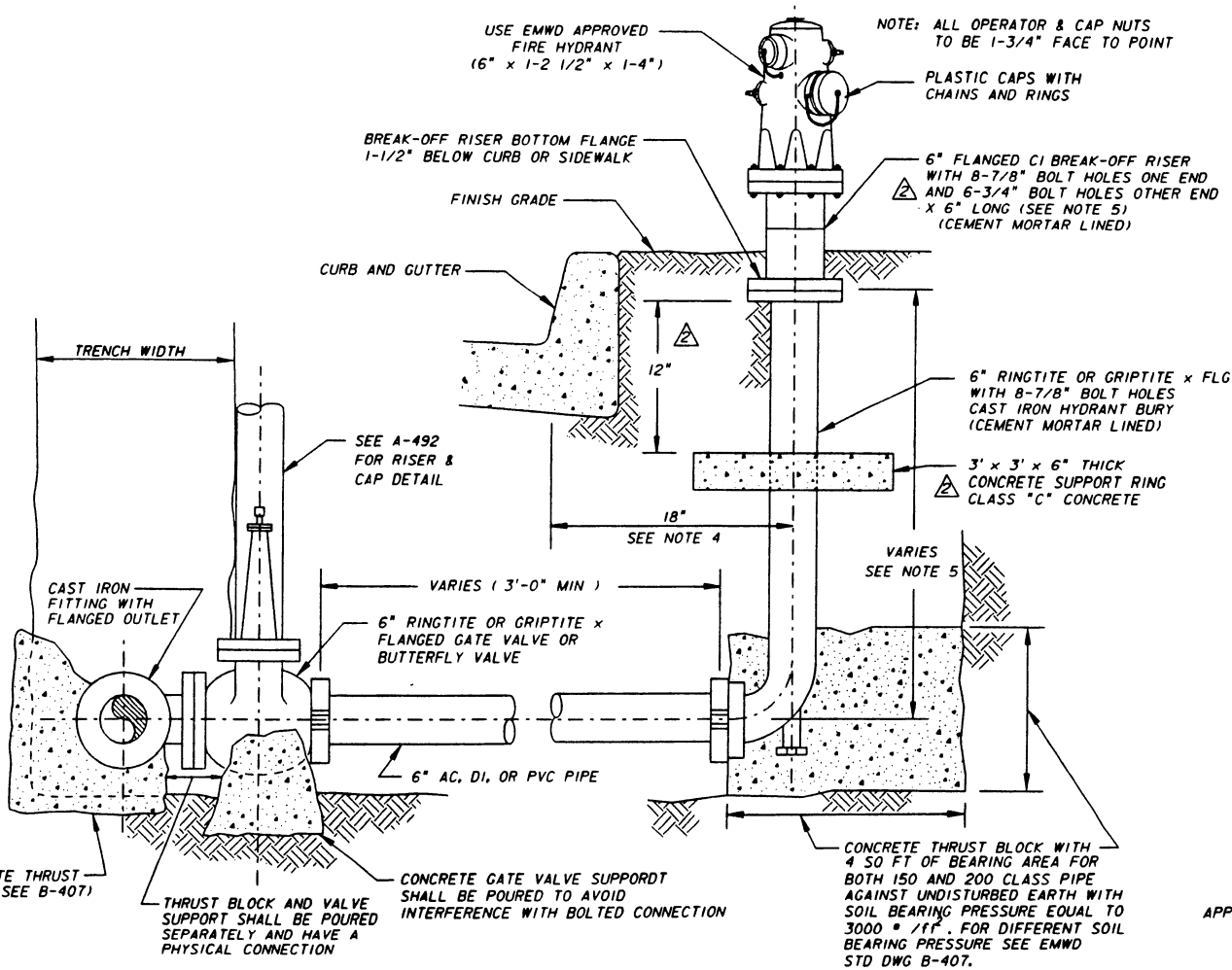

NOTES

1. HYDRANT TO BE PAINTED WITH REFLECTIVE SCOTCHLITE S-368 OR S-370, OR APPROVED EQUAL.
2. USE THRUST BLOCKS PER B-407 FOR ACP. USE RESTRAINED JOINTS PER B-663 FOR PVC AND DUCTILE IRON. CONCRETE FOR THRUST BLOCKS AND SUPPORTS TO BE CLASS "C" (2000 PSI) CONCRETE.
3. ALTERNATE MATERIALS MAY BE USED WHEN AUTHORIZED.
4. FIRE HYDRANT PLACEMENT:
   A. CURB AND SIDEWALK SEPARATED: FIRE HYDRANT TO BE 18" BEHIND CURB FACE, AS SHOWN.
   B. CURB AND SIDEWALK ADJACENT: FIRE HYDRANT TO BE 18" BEHIND SIDEWALK, BUT NOT LESS THAN 8" WITHIN THE ROAD RIGHT-OF-WAY.
   C. SIDEWALK FULL WIDTH OF RIGHT-OF-WAY: FIRE HYDRANT TO BE 18" BEHIND THE CURB.
   D. NO CURBS OR SIDEWALKS PROPOSED: FIRE HYDRANT TO BE 18" WITHIN ROAD RIGHT-OF-WAY.
2. 5. LENGTH OF FIRE HYDRANT BURY TO BE DETERMINED BY THE DIFFERENCE IN ELEVATION BETWEEN THE CENTER GRADE OF THE PIPELINE OUTLET AND THE BREAK-OFF RISER BOTTOM FLANGE.
6. FIRE HYDRANT LOCATION:
   A. STREET INTERSECTIONS: FIRE HYDRANT TO BE 5' PAST THE CURB RETURN.
   B. OTHER THAN STREET INTERSECTIONS: FIRE HYDRANT TO BE ON A LOT LINE AS SHOWN ON PLANS.
7. ALL FIRE HYDRANTS TO HAVE A "BLUE DOT" MARKER PER CITY OF HEMET STANDARD W-700A ("STD").
8. ALL BURIED BARE METAL SHALL BE FIELD COATED PER EMWD SPECIFICATIONS AND APPROVED MATERIALS.

APPROVED: Bernard Phillips DATE: 5/5/93

CITY OF HEMET

REVISIONS					
NO.	DATE	INITIAL	DESCRIPTION	APP'D	DATE
1	4/8/93	KER	REDRAWN W/CADD ON MYLAR	VJB	5/19/93
2	5/18/00	GR	REV NTS 2&5, CLLOUT, ADD CONC SPT BLK&DIM	VJB	5/19/93

APPROVALS		
	INITIAL	DATE
DESIGN		
CONSTRUCTION		
INSPECTION		
OPERATIONS	PR	5/18/93
SUBMITTED	VJB	5/19/93

EASTERN MUNICIPAL WATER DISTRICT

EASTERN MUNICIPAL WATER DISTRICT

EASTERN MUNICIPAL WATER DISTRICT
STANDARD DRAWING

6" x 1-2 1/2" x 1-4" FIRE HYDRANT INSTALLATION - CITY OF HEMET AC, PVC, DI PIPE

REFERENCES: ORIG DRAWN BY RAH 5/71
FILE I.D.: D_STANDARDS/B388.DGN

SCALE: NONE
DRAWN BY

RECOMMENDED Joseph D. Van Sichle 6/1/93
DIRECTOR OF ENGINEERING DATE

APPROVED G. Hooits Rugge 7/2/93
CHIEF ENGINEER DATE

B-388 2

THRUST BLOCK TABLES

PIPE SIZE "	TYPE OF FITTING	SAFE SOIL BEARING #/SQ.FT.	THRUST BLOCK DIMENSIONS CLASS 150 HGT.-WIDTH	THRUST BLOCK DIMENSIONS CLASS 200 HGT.-WIDTH	SAFE SOIL BEARING #/SQ.FT.	THRUST BLOCK DIMENSIONS CLASS 150 HGT.-WIDTH	THRUST BLOCK DIMENSIONS CLASS 200 HGT.-WIDTH	SAFE SOIL BEARING #/SQ.FT.	THRUST BLOCK DIMENSIONS CLASS 150 HGT.-WIDTH	THRUST BLOCK DIMENSIONS CLASS 200 HGT.-WIDTH	SAFE SOIL BEARING #/SQ. FT.	THRUST BLOCK DIMENSIONS CLASS 150 HGT.-WIDTH	THRUST BLOCK DIMENSIONS CLASS 200 HGT.-WIDTH
16	TEE	1500	5'x 7'	6'x 7'	2000	4' x 7'	5' x 6'	3000	4' x 5'	4' x 5'	5000	3' x 5'	3' x 4'
16	90° BEND	1500	5 x 10	6 x 10	2000	5 x 8	5 x 9	3000	4 x 6	5 x 6	5000	3 x 5	3 x 6
16	45° BEND	1500	4 x 7	4 x 8	2000	4 x 5	4 x 6	3000	3 x 5	4 x 4	5000	2 x 4	2 x 5
16	22½° BEND	1500	3 x 5	4 x 4	2000	3 x 4	3 x 4	3000	2 x 4	3 x 3	5000	2 x 2	2 x 3
14	TEE	1500	4 x 7	4 x 8	2000	4 x 5	4 x 6	3000	3 x 5	4 x 4	5000	3 x 3	2 x 5
14	90° BEND	1500	5 x 10	5 x 9	2000	5 x 8	5 x 7	3000	5 x 5	4 x 6	5000	3 x 5	3 x 5
14	45° BEND	1500	4 x 5	4 x 6	2000	4 x 4	3 x 6	3000	3 x 4	3 x 4	5000	2 x 3	2 x 4
14	22½° BEND	1500	3 x 4	3 x 4	2000	2 x 4	3 x 3	3000	2 x 3	2 x 6	5000	1 x 3	2 x 2
12	TEE	1500	4 x 5	4 x 6	2000	3 x 5	3 x 6	3000	3 x 4	3 x 4	5000	2 x 3	2 x 4
12	90° BEND	1500	4 x 7	4 x 8	2000	4 x 6	4 x 6	3000	3 x 5	4 x 4	5000	3 x 3	2 x 5
12	45° BEND	1500	4 x 4	3 x 6	2000	3 x 4	3 x 5	3000	2 x 4	3 x 3	5000	2 x 3	2 x 3
12	22½° BEND	1500	2 x 4	3 x 3	2000	2 x 3	2 x 4	3000	2 x 2	2 x 3	5000	1 x 3	1 x 3
8	TEE	1500	3 x 3	2 x 5	2000	2 x 3	2 x 4	3000	2 x 3	2 x 3	5000	1 x 3	1 x 3
8	90° BEND	1500	3 x 4	3 x 5	2000	3 x 3	3 x 4	3000	2 x 3	2 x 4	5000	2 x 2	2 x 3
8	45° BEND	1500	2 x 4	2 x 4	2000	2 x 3	2 x 6	3000	2 x 2	2 x 2	5000	1 x 2	1 x 3
8	22½° BEND	1500	2 x 2	2 x 2	2000	1 x 3	1 x 3	3000	1 x 2	1 x 2	5000	1 x 1	1 x 1
6	TEE	1500	2 x 3	2 x 3	2000	2 x 2	2 x 2	3000	1 x 3	1 x 3	5000	1 x 2	1 x 2
6	90° BEND	1500	2 x 4	2 x 4	2000	2 x 3	2 x 3	3000	2 x 2	2 x 2	5000	1 x 2	1 x 3
6	45° BEND	1500	2 x 2	2 x 2	2000	1 x 3	2 x 2	3000	1 x 2	1 x 3	5000	1 x 1	1 x 2
6	22½° BEND	1500	1 x 2	1 x 2	2000	1 x 2	1 x 2	3000	1 x 1	1 x 1	5000	1 x 1	1 x 1
4	TEE	1500	1 x 3	1 x 3	2000	1 x 2	1 x 2	3000	1 x 2	1 x 2	5000	1 x 1	1 x 1
4	90° BEND	1500	2 x 2	2 x 2	2000	1 x 3	1 x 3	3000	1 x 2	1 x 2	5000	1 x 1	1 x 1
4	45° BEND	1500	1 x 3	1 x 2	2000	1 x 2	1 x 2	3000	1 x 1	1 x 1	5000	0	1 x 1
4	22½° BEND	1500	1 x 1	1 x 1	2000	1 x 1	1 x 1	2000	0	1 x 1	5000	0	0

NOTES

1. CONCRETE THRUST BLOCKS ARE TO BE POURED AGAINST UNDISTURBED EARTH.
2. CONCRETE THRUST BLOCKS SHALL BE OF CLASS 'C' (4½ SACK MIX) CONCRETE.
3. ALL GATE VALVES SHALL BE SUPPORTED PER DETAIL 'A' BELOW, & STD. DWG. B-255 & B-279
4. PLUG ALL STUBS PER DWG. B-414.
5. ALL CONCRETE SHALL BE POURED TO AVOID INTERFERENCE WITH BOLTED CONNECTIONS.
6. WHERE PIPE CONNECTS TO A FITTING IN A STEEL PIPELINE, THE STEEL PIPELINE SHALL BE BLOCKED AS SHOWN HEREON.

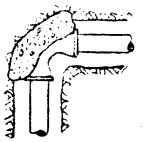

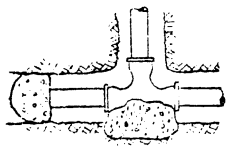

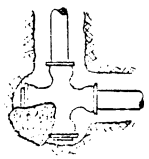

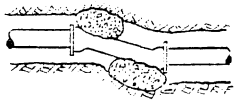

PLAN VIEW

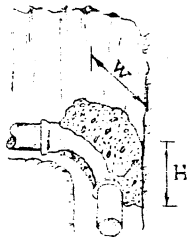

PERSPECTIVE VIEW

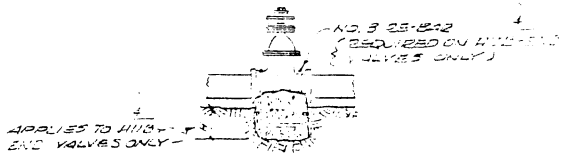

DETAIL 'A'

TYPICAL THRUST BLOCK INSTALLATION

REVISIONS					REFERENCES			SCALE NONE	DATE
NO.	DATE	INITIAL	DESCRIPTION	APP'VD	TRANSITE PIPE MANUAL			DESIGNED	
1	10-11-69	JED	ADD NOTE 6, & REVISE TABLES	LAM				DRAWN JED	
2	10-21-69	McM	REVISE TABLES	LAM				TRACED	
3	7-23-71	SBJ	ADDED CLASS 200	LAM	APPROVALS			CHECKED	
4	2-16-73	McM	REVISD TITLE TO SAY "HUB-END PIPE"	LAM				SUBMITTED LAM	
					DESIGN	CONSTRUCTION	OPERATIONS	RECOMMENDED	

EASTERN MUNICIPAL WATER DISTRICT
RIVERSIDE COUNTY, CALIFORNIA

STANDARD DRAWING

THRUST BLOCK INSTALLATION FOR HUB-END PIPE - CLASS 150 & 200

APPROVED GENERAL MANAGER & CHIEF ENGINEER

B-407

4

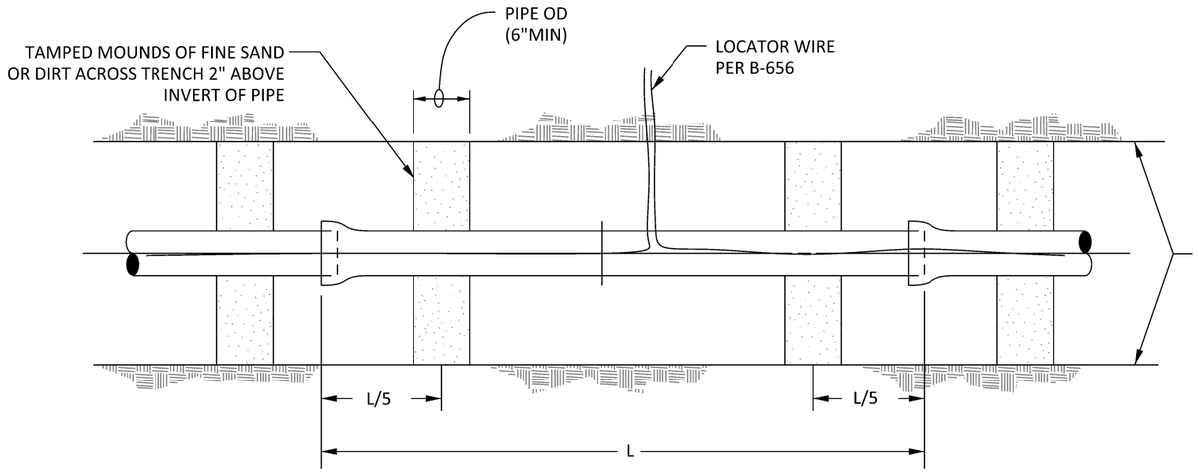

PLAN VIEW

TYPICAL PIPE INSTALLATION

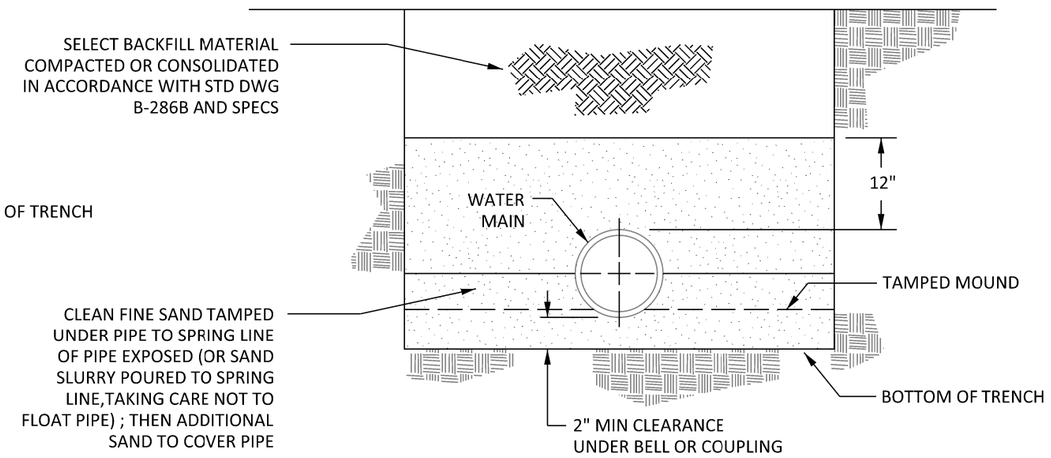

TYPICAL TRENCH SECTION

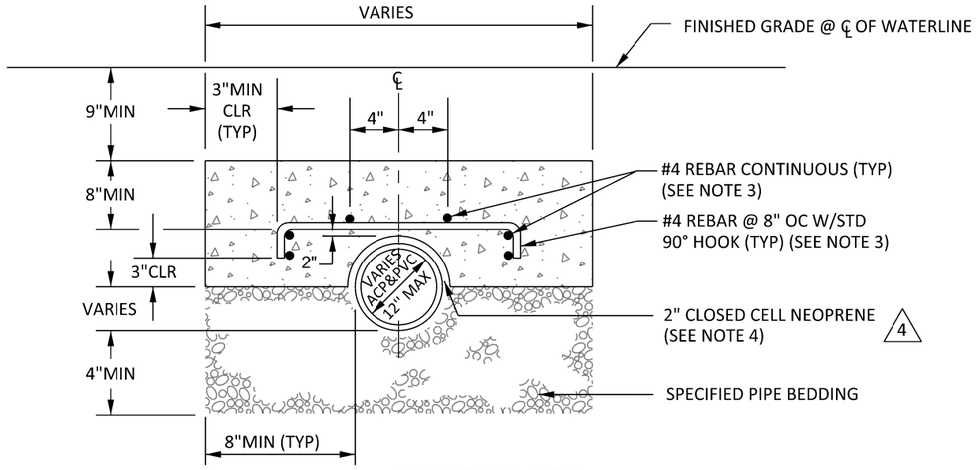

CONCRETE CAP DETAIL

NOTES:

PIPE ZONE BACKFILL

2 1. THE BACKFILL MATERIAL IN THE PIPE ZONE MAY CONSIST OF MATERIAL FROM THE EXCAVATION WHERE THAT MATERIAL IS A UNIFORMLY GRADED SUITABLE SOIL FREE FROM STONES OR LUMPS EXCEEDING 3/4" IN GREATEST DIMENSION, VEGETABLE MATTER OR OTHER UNSATISFACTORY MATERIAL, AS APPROVED BY THE ENGINEER, AND COMPACTED TO A RELATIVE COMPACTION AS RECOMMENDED BY THE MANUFACTURER OF THE PIPE.

3

CONCRETE CAP (FOR SHALLOW WATERLINE WHEN APPROVED BY ENGINEER)

2. CAP SHALL BE OF CLASS "A" CONCRETE.
3. REBAR SHALL HAVE A YIELD STRENGTH OF 60 KSI.

4 4. CLOSED CELL NEOPRENE PER ASTM D-1056, D-1667a & D-412;
- · COMPRESSION RESISTANCE = 5-13 PSI
- · 50% COMPRESSION SET = 25%
- · DENSITY = 15-30 LBS/FT³
- · WATER ABSORBTION = 0.1 MAX LBS/FT²
- · TENSILE = 150 MIN. PSI
- · ELONGATION = 350 MIN. %

REVISIONS

NO.	DATE	INITIAL	DESCRIPTION	APP'D	DATE
4	11/22/17	GS	UPDATED TITLE BLOCK, LOGO, FONT, ADDED CLOSED CELL NEOPRENE, REVISED NOTE 4	AGA	11/22/17
3	11/30/07	RE	REVISED NOTE 1		
2	5/20/02	JLG	REVISED NOTE 1	VJB	5/20/02
1	11/21/95	KER	REDRAWN W/CAD ON MYLAR	VJB	6/11/96

REFERENCES: SUPERCEDES A-537

FILE I.D.: \kauai\eng\std dwgs\B-408.dgn

SCALE: NONE

DRAWN BY: KER

APPROVALS

	INITIAL	DATE
DESIGN		
CONSTRUCTION	VJB	5/8/96
INSPECTION	GM	5/10/96
OPERATIONS	JEW	6/11/96
SUBMITTED	ML	5/9/96

RECOMMENDED Charlie J. Bachmann 6/11/96
DIRECTOR OF ENGINEERING DATE

emwd EASTERN MUNICIPAL WATER DISTRICT

EASTERN MUNICIPAL WATER DISTRICT
STANDARD DRAWING

WATER PIPE INSTALLATION ACP, PVC AND DIP

APPROVED G. Hoxie Rugge 6/11/96
CHIEF ENGINEER DATE

B-408

4

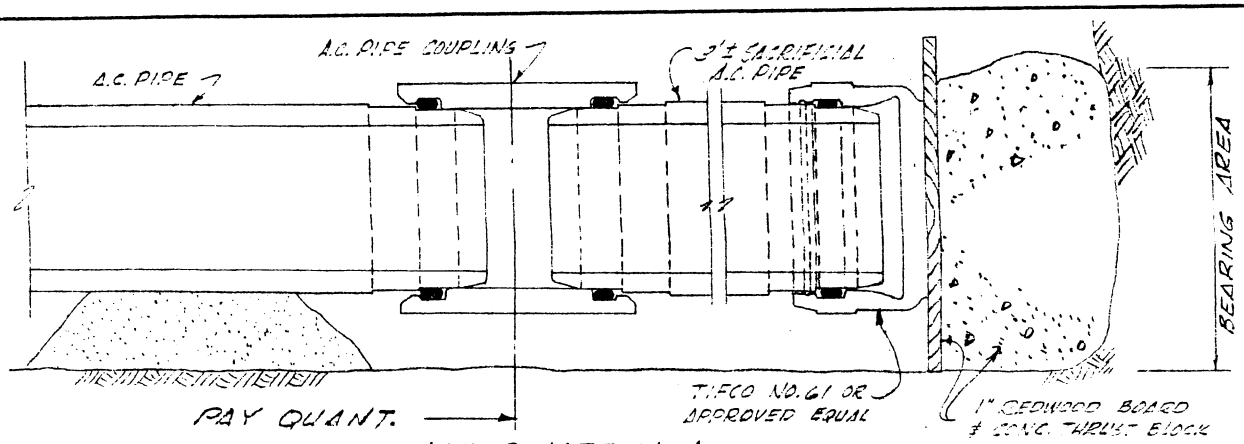

ALTERNATE No. 1

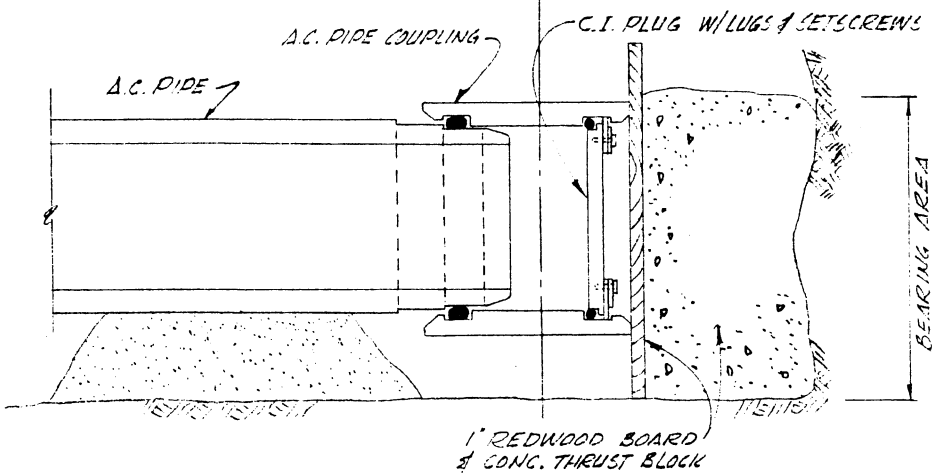

ALTERNATE No. 2

NOTES:

1. Concrete thrust blocks to be poured against undisturbed earth with minimum bearing area in accordance with B-407 (TEE).
2. Concrete thrust blocks shall be of class "C" (2000 P.S.I.) concrete.

REVISIONS				
NO.	DATE	INITIAL	DESCRIPTION	APP'VD
1	3/85	GH.	REFERRED TO B-407	[illegible]

REFERENCES		
DWGS. B-407 & B-408		

APPROVALS		
LM 1-4-66	[illegible]	CAG 1-4-66
DESIGN	CONSTRUCTION	OPERATIONS

		DATE
SCALE	NONE	
DESIGNED	LM	12-13-65
DRAWN	RWH	12-14-65
TRACED		
CHECKED	LM	
SUBMITTED	[illegible]	
RECOMMENDED	[illegible]	

EASTERN MUNICIPAL WATER DISTRICT
RIVERSIDE COUNTY, CALIFORNIA

STANDARD DRAWING
WATER PIPELINE END PLUG INSTALLATION FOR A.C. PIPE

APPROVED [illegible] GENERAL MANAGER & CHIEF ENGINEER

B-414

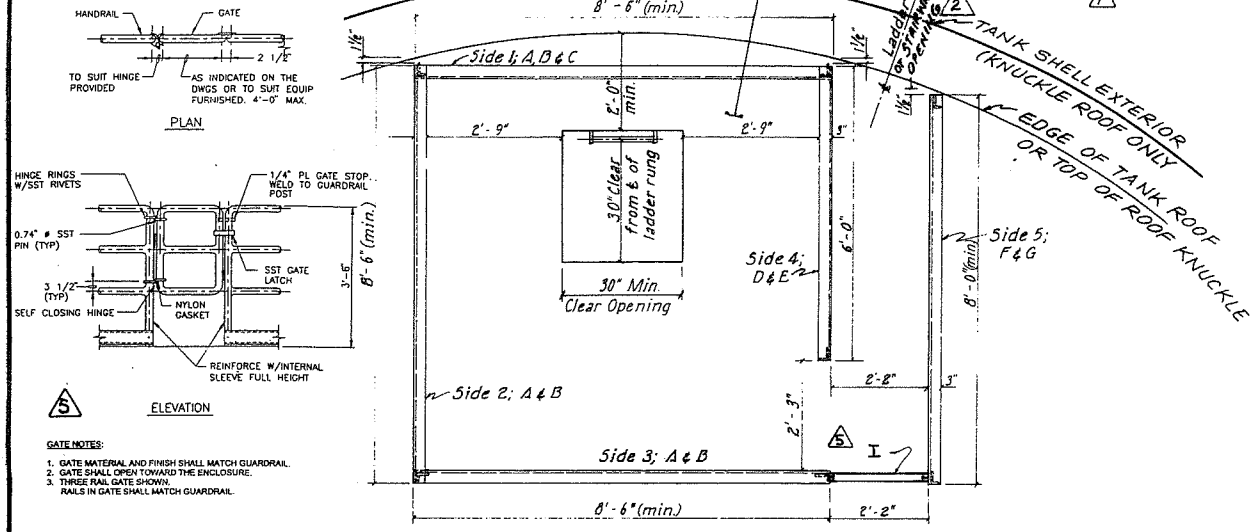

PLAN VIEW

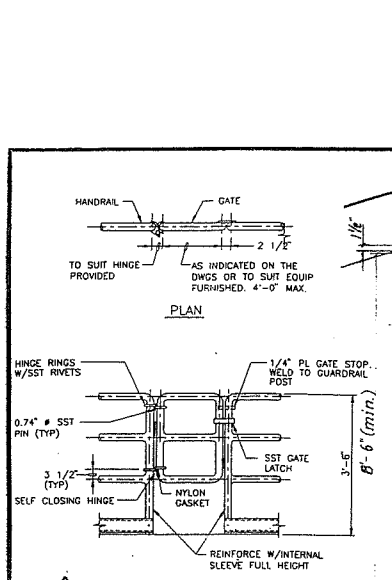

GATE NOTES:

1. GATE MATERIAL AND FINISH SHALL MATCH GUARDRAIL.
2. GATE SHALL OPEN TOWARD THE ENCLOSURE.
3. THREE RAIL GATE SHOWN. RAILS IN GATE SHALL MATCH GUARDRAIL.

SELF CLOSING GATE AT GUARDRAIL DETAIL

MATERIAL LIST FOR MANWAY ENCLOSURE

MARK#	QUANTITY	SECTION	LENGTH
A	3	∠ 3" x 3" x 3/16" (Sides 1, 2 & 3)	8' - 6"
B	3	∠ 3" x 2" x 3/16" " " "	8' - 5½"
C	1	Bar 4" x 3/16" (Side 1 only)	8' - 5½"
D	1	∠ 3" x 3" x 3/16" (Side 4)	6' - 0"
E	1	∠ 3" x 2" x 3/16" " "	5' - 11½"
F	1	∠ 3" x 3" x 3/16" (Side 5)	8' - 0"
G	1	∠ 3" x 2" x 3/16" " "	7' - 11½"
H	7	∠ 3" x 2" x 3/16" (Uprights)	3' - 5½"
I	1	SELF CLOSING GATE	2' - 2"
Eye Bolts	2	3/16" Eye bolts	1½"
Snap	1	Cold shut harness snap	2½"
N	2	3" ø BLACK PIPE	2' 2"

LOCKER

WELD OR BOLT, IN HORIZONTAL POSITION, ON TO OUTSIDE OF TOP RAIL, ONE WEATHER PROTECTED, RAINTIGHT LOCKER W/HASP OF ADEQUATE SIZE TO STORE REMOVEABLE "SAF-T-CLIMB" EXTENSION & TWO "SAF-T-BELTS."

ANGLE IRON = A36
BAR = MILD STEEL

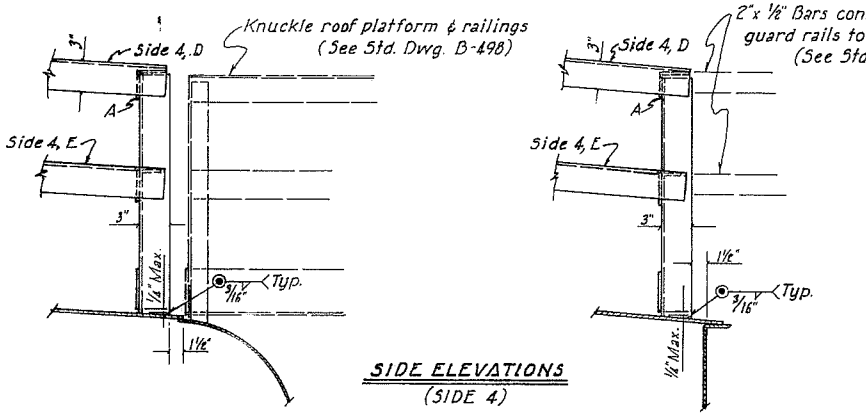

SIDE ELEVATIONS
(SIDE 4)

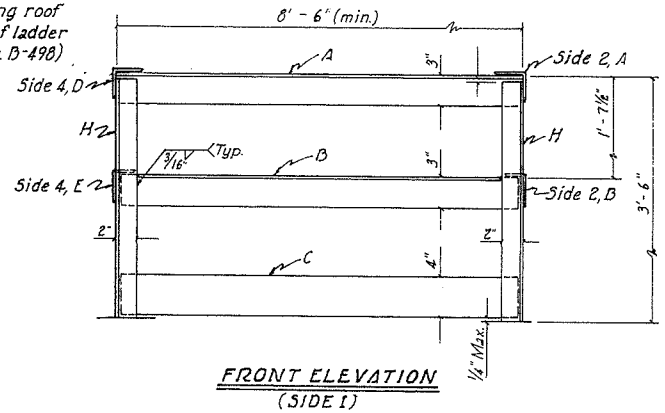

FRONT ELEVATION
(SIDE 1)

REVISIONS				
NO.	DATE	INITIAL	DESCRIPTION	APP'VD
1	3-6-84	H. H.	LEVEL CONTROLLER PLATFORM & ACCESS HOLES	
2	3-29-89	S.K.D.	Added Stairway; changed Manway to Hatch.	
3	5-25-90	J. J. W.	REMOVED LEVEL CONTROLLER PLATFORM & HOLES	5/30/90
4	5-8-91	T.R.S.	ADDED LOCKER NOTE	5/14/91
5	10-25-06	RE	REVISED MARK # I & GATE DETAIL	10/11/06

REFERENCES: Replaces Std. Dwg. B-330

APPROVALS: DESIGN | CONSTRUCTION | OPERATIONS

SCALE	None	DATE
DESIGNED		
DRAWN	McM	12-2-74
TRACED		
CHECKED		
SUBMITTED	Ltr 12-16-74	
RECOMMENDED		

EASTERN MUNICIPAL WATER DISTRICT
RIVERSIDE COUNTY, CALIFORNIA

STANDARD DRAWING
TANK ROOF HATCH ENCLOSURE

2

APPROVED: GENERAL MANAGER & CHIEF ENGINEER

B-500

5

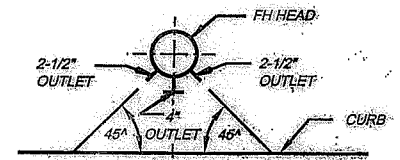

OUTLET ORIENTATION

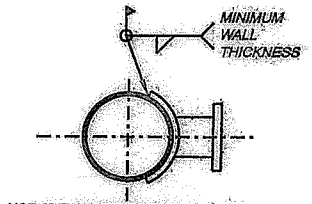

USE 6" FLANGED SADDLE OUTLET FOR INSTALLATION ON 12" OR LARGER PIPELINE

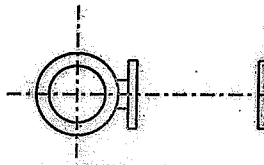

USE CAST IRON TEE FOR INSTALLATION ON 6" OR 8" PIPELINE

PIPELINE INSTALLATION

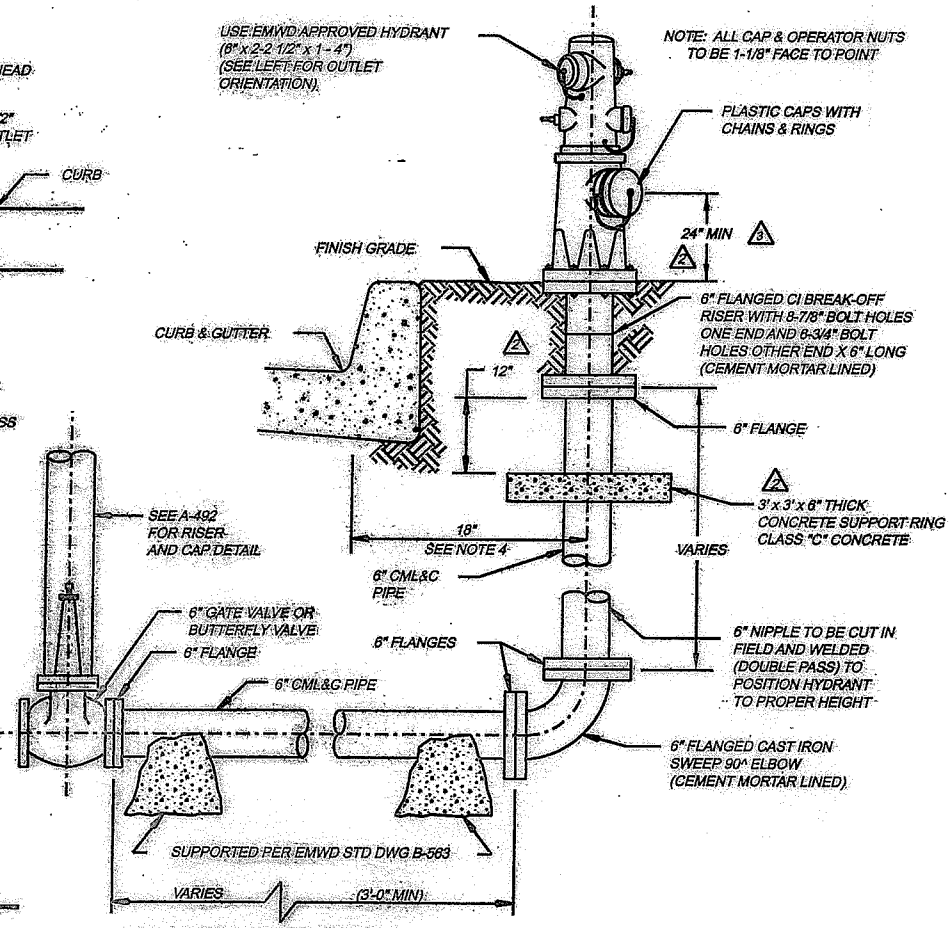

FIRE HYDRANT ASSEMBLY

GENERAL NOTES

2 1. PAINTS:
HYDRANT TOPS AND NOZZLE CAPS, 1500 gpm OR GREATER TO BE LIGHT BLUE.
HYDRANT TOPS AND NOZZLE CAPS, 1000 gpm TO 1499 gpm, TO BE GREEN.
HYDRANT TOPS AND NOZZLE CAPS, 500 gpm TO 999 gpm, TO BE ORANGE.
HYDRANT TOPS AND NOZZLE CAPS, LESS THAN 500 gpm, TO BE RED.

2. ALL FLANGES SHALL BE FULL WELDED (DOUBLE PASS) AND COATED IN THE FIELD AS DIRECTED BY ENGINEER PER NOTE 5.

3. ALTERNATE MATERIALS MAY BE USED WHEN SPECIFIED.

4. FIRE HYDRANT LOCATIONS:
A. FIRE HYDRANT SHALL BE PLACED
1. 1'-6" BEHIND CURB FACE WHEN WIDTH OF SIDEWALK IS 8' OR WIDER.
2. 7'-6" BEHIND CURB FACE WHEN WIDTH OF SIDEWALK IS 6' WIDE.
3. 7'-6" BEHIND CURB FACE WHEN THERE IS NO SIDEWALK.
2 4. 1'-6" WITHIN ROAD RIGHT-OF-WAY WHEN NO CURBS OR SIDEWALKS ARE PROPOSED.
B. FIRE HYDRANT TO BE 1' BACK FROM INTERSECTION OF SIDEWALK WITH CORNER APRON.
C. AT OTHER THAN STREET INTERSECTIONS FIRE HYDRANTS TO BE ON LOT LINES.

5. FIELD COATING FOR EXPOSED PIPE SHALL BE PER EMWD SPECIFICATIONS AND APPROVED MATERIALS.

2 6. A MINIMUM 3 FT CLEAR SPACE SHALL BE MAINTAINED AROUND THE CIRCUMFERENCE OF THE FIRE HYDRANT.

RIVERSIDE COUNTY SUPER FIRE HYDRANT

REVISIONS					
NO.	DATE	INITIAL	DESCRIPTION	APP'D	DATE
1	4/6/93		REDRAWN BY CADD ON MYLAR	VJB	7/2/93
2	5/18/00	GR	REV NOTES 1, 4, 6, ADD CONC SUPPORT & DIMS	VJB	5/19/00
3	10/2/06	RE	REVISED FIRE HYDRANT DIMENSION	[illegible]	10/2/06

APPROVALS	INITIAL	DATE
DESIGN		
CONSTRUCTION		
INSPECTION		
OPERATIONS	PR	5/18/93
SUBMITTED	VJB	5/19/93

EASTERN MUNICIPAL WATER DISTRICT

EASTERN MUNICIPAL WATER DISTRICT
STANDARD DRAWING

6" x 2-2 1/2" x 1-4" FIRE HYDRANT INSTALLATION—STEEL PIPE

REFERENCES: ORIG DRAWN BY MCM 8/75
FILE I.D.: KAUAI/ENGINEERING/STD/DWG
SCALE: NONE
DRAWN BY

RECOMMENDED Joseph D. Van Sickle 6/1/93
DIRECTOR OF ENGINEERING — DATE

APPROVED G. Hoote Rugge 7/2/93
CHIEF ENGINEER — DATE

B-516 3

b516.dgn 10/2/2006 11:07:48 AM

OUTLET ORIENTATION

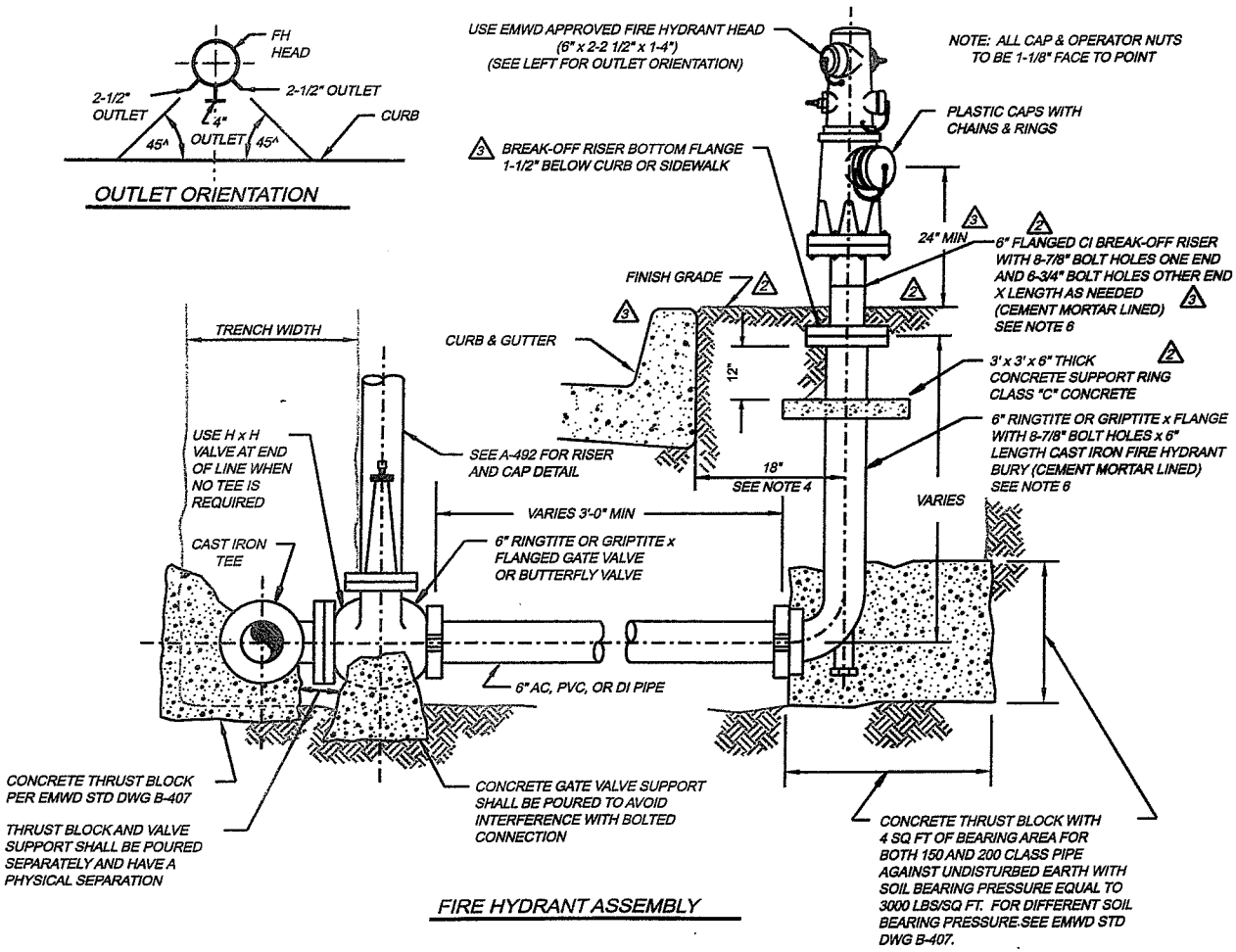

FIRE HYDRANT ASSEMBLY

GENERAL NOTES

2 1. PAINTS:
HYDRANT TOPS AND NOZZLE CAPS, 1500 GPM OR GREATER, TO BE LIGHT BLUE.
HYDRANT TOPS AND NOZZLE CAPS, 1000 GPM TO 1499 GPM, TO BE GREEN.
HYDRANT TOPS AND NOZZLE CAPS, 500 GPM TO 999 GPM, TO BE ORANGE.
HYDRANT TOPS AND NOZZLE CAPS, LESS THAN 500 GPM, TO BE RED.

2 2. USE THRUST BLOCKS PER B-407 FOR ACP. USE RESTRAINED JOINTS PER B-663 FOR PVC AND DUCTILE IRON. CONCRETE FOR THRUST BLOCKS AND SUPPORTS TO BE CLASS "C" (2000 PSI) CONCRETE.

3. ALTERNATE MATERIALS MAY BE USED WHEN SPECIFIED.

4. FIRE HYDRANT LOCATIONS:
A. FIRE HYDRANT SHALL BE PLACED:
1. 1'6" BEHIND CURB FACE WHEN WIDTH OF SIDEWALK IS 8' OR WIDER.
2. 7'6" BEHIND CURB FACE WHEN WIDTH OF SIDEWALK IS 6' WIDE.
3. 7' 6" BEHIND CURB FACE WHEN THERE IS NO SIDEWALK.
2 4. 1'-6" WITHIN ROAD RIGHT-OF-WAY WHEN NO CURBS OR SIDEWALKS ARE PROPOSED.
B. FIRE HYDRANT TO BE 1 FT BACK FROM INTERSECTION OF SIDEWALK WITH CORNER APRON.
C. AT OTHER THAN STREET INTERSECTIONS FIRE HYDRANTS TO BE ON LOT LINES.

5. FIELD COATING FOR EXPOSED PIPE SHALL BE PER EMWD SPECIFICATIONS AND APPROVED MATERIALS.

2 6. LENGTH OF BREAK-OFF RISER TO BE DETERMINED BY THE DIFFERENCE IN ELEVATION BETWEEN THE CENTER GRADE OF THE PIPELINE OUTLET AND THE TOP OF THE CURB, LESS THE LENGTH FOR THE FIRE HYDRANT BURY. IF THE BREAK-OFF 3 RISER EXCEEDS 24", USE THE NEXT ONE FOOT LONGER BURY. UNDER NOTE 4B ABOVE, ADD 2" RISER TO ALLOW FOR SIDEWALK SLOPE.

2 7. A MINIMUM OF 3 FT CLEAR SPACE SHALL BE MAINTAINED AROUND THE CIRCUMFERENCE OF THE FIRE HYDRANT.

RIVERSIDE COUNTY SUPER FIRE HYDRANT

REVISIONS					
NO.	DATE	INITIAL	DESCRIPTION	APP'D	DATE
1	3/30/93		REDRAWN W/CADD ON MYLAR	VJB	7/2/93
2	3/7/00	GR	REV NOTES 1,2,4,6,7,ADD CONC SUPPORT &DIMS	VJB	5/19/00
3	10/2/06	RE	REVISED F.H. DIMENSION, GRADE & BREAK-OFF NOTES	KM	10/10/06

APPROVALS		
	INITIAL	DATE
DESIGN		
CONSTRUCTION		
INSPECTION		
OPERATIONS	PR	5/18/93
SUBMITTED	VJB	5/19/93

EASTERN MUNICIPAL WATER DISTRICT

EASTERN MUNICIPAL WATER DISTRICT
STANDARD DRAWING

6" x 2-2 1/2" x 1-4" FIRE HYDRANT INSTALLATION-AC, PVC, DI PIPE

REFERENCES: ORIG DRAWN 8/75
FILE I.D.: KAUAI/ENGINEERING/STD/DWG

SCALE: NONE
DRAWN BY

RECOMMENDED Joseph D. Van Sickle 6/1/93
DIRECTOR OF ENGINEERING DATE

APPROVED G. Hoaite Rugge 7/2/93
CHIEF ENGINEER DATE

B-517 3

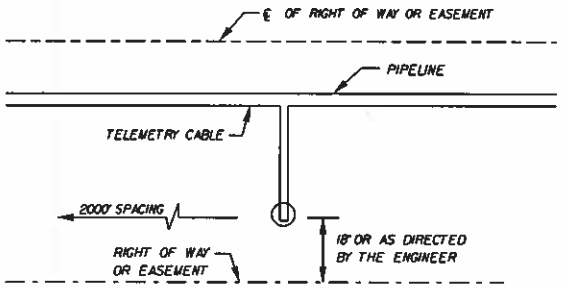

TERMINAL PLAN VIEW

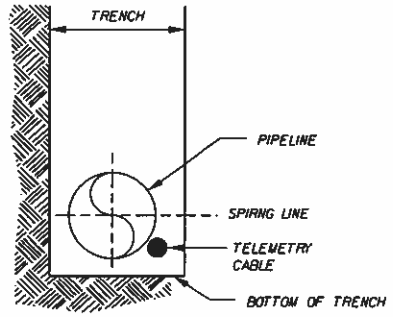

CABLE LOCATION

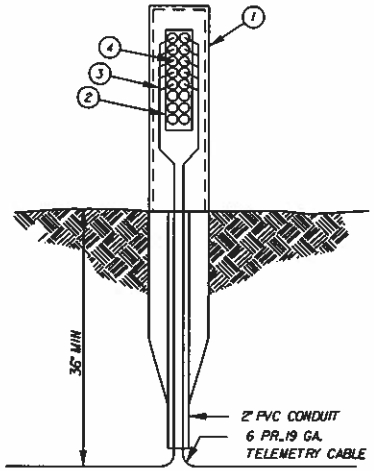

TERMINAL PROFILE

NOTES:

1. TERMINAL AND PEDESTAL TO BE ASSEMBLED AND INSTALLED PER MANUFACTURER'S RECOMMENDATIONS
2. TERMINALS TO BE INSTALLED 18' WITHIN RIGHT OF WAY OR EASEMENT AT 2000' INTERVALS.
3. 6 PAIR, 40 VOLT CAPACITY, 19 GAUGE, SOLID TELECOMMUNICATIONS CABLE. JELLY FILLED POLYETHYLENE INNER JACKET, 5 MIL COPPER SHIELD, POLYETHYLENE JACKET FOR DIRECT BURIAL CABLE.
4. CONTRACTOR SHALL PROVIDE A 50' COIL OF TELEMETRY CABLE AT THE BEGINNING AND END OF THE JOB.
5. WHERE AN UNDERGROUND SPLICE IS APPROVED BY EMWD, SPLICE SHALL BE MADE WITH A 3M "72-N2 THERMAL FIT CABLE REPAIR SLEEVE OR APPROVED EQUAL AND PERFORMED BY A QUALIFIED CABLE SPLICER
6. ALL MATERIALS TO BE PER EMWD APPROVED MATERIAL LIST

MATERIALS:

ITEM	QTY	DESCRIPTION
1	1	8' CIRCULAR PEDESTAL ENCLOSURE W/ "EMWD" STENCIL ATTACHED TO FRONT COVER.
2	1	TERMINAL BLOCK
3	1	12" DIN RAIL
4	2	TERMINAL END STOPS
5	LF	2" PVC CONDUIT
6	LF	6 PR. 19 GAUGE TELEMETRY CABLE

REVISIONS					
NO.	DATE	INITIAL	DESCRIPTION	APP'D	DATE
1	5/26/00	KER	REDRAWN W/CADD ON MYLAR	WB	6/2/00
2	8/19/05	CM	ADDED EMWD STENCIL	WB	8/19/05

APPROVALS		
	INITIAL	DATE
DESIGN	WS	2/76
CONSTRUCTION		
INSPECTION		
OPERATIONS	CAG	2/76
SUBMITTED	EM	2/76

EASTERN MUNICIPAL WATER DISTRICT

EASTERN MUNICIPAL WATER DISTRICT
STANDARD DRAWING

TELEMETRY WIRE AND TERMINAL

REFERENCES:
FILE I.D.: \kauai\engineering\stddwgs\b533.dgn

SCALE: NONE
DRAWN BY: KER

APPROVED Doyle F. Boen ASSISTANT GENERAL MANAGER 2/76 DATE

B-533

2

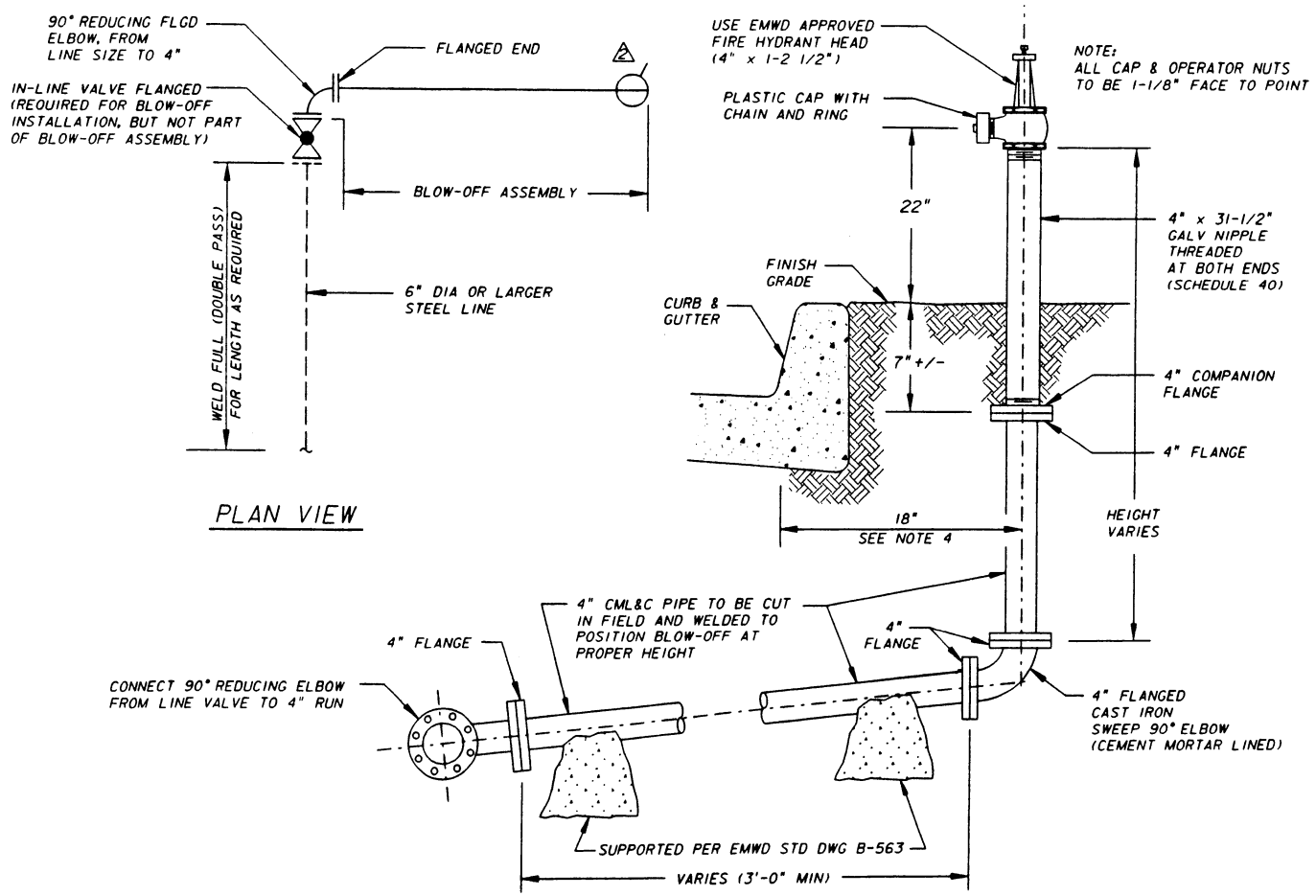

BLOW-OFF ASSEMBLY-PROFILE

GENERAL NOTES

1. PAINTS:
   BLOW-OFF TO BE PAINTED APPROVED YELLOW.
2. ALL FLANGES SHALL BE FULL WELDED (DOUBLE PASS) AND COATED IN THE FIELD AS DIRECTED BY THE ENGINEER IN NOTE 5.
3. ALTERNATE MATERIALS MAY BE USED WHEN SPECIFIED.
4. BLOW-OFF PLACEMENT:
   TEMPORARY BLOW-OFFS SHALL BE LOCATED SO AS NOT TO INTERFERE WITH FUTURE IMPROVEMENTS THAT WILL BE INSTALLED PRIOR TO THE WATER MAIN EXTENSION.
5. FIELD COATING FOR EXPOSED PIPE SHALL BE PER EMWD SPECIFICATIONS AND APPROVED MATERIALS.

REVISIONS					
NO.	DATE	INITIAL	DESCRIPTION	APP'D	DATE
1	4/15/93		REDRAWN W/CADD ON MYLAR	VJB	5/19/93
2	5/13/94		REVISED BLOW-OFF SYMBOL	VJB	5/19/93
3	5/18/00	GR	REVISED ALL FONT	VJB	5/19/00

APPROVALS		
	INITIAL	DATE
DESIGN		
CONSTRUCTION		
INSPECTION		
OPERATIONS	DR	5/18/93
SUBMITTED	VJB	5/19/93

REFERENCES: ORIG DRAWN 1/77
FILE I.D.: D_STANDARDS/B561.DGN

SCALE: NONE
DRAWN BY

RECOMMENDED Joseph D. Van Sickle, DIRECTOR OF ENGINEERING 6/1/93 DATE

EASTERN MUNICIPAL WATER DISTRICT

EASTERN MUNICIPAL WATER DISTRICT
STANDARD DRAWING

4" x 1-2 1/2" BLOW-OFF TEMP END INSTALLATION - STEEL PIPE

APPROVED G. Hoots Rugg, CHIEF ENGINEER 7/2/93 DATE

B-561

3

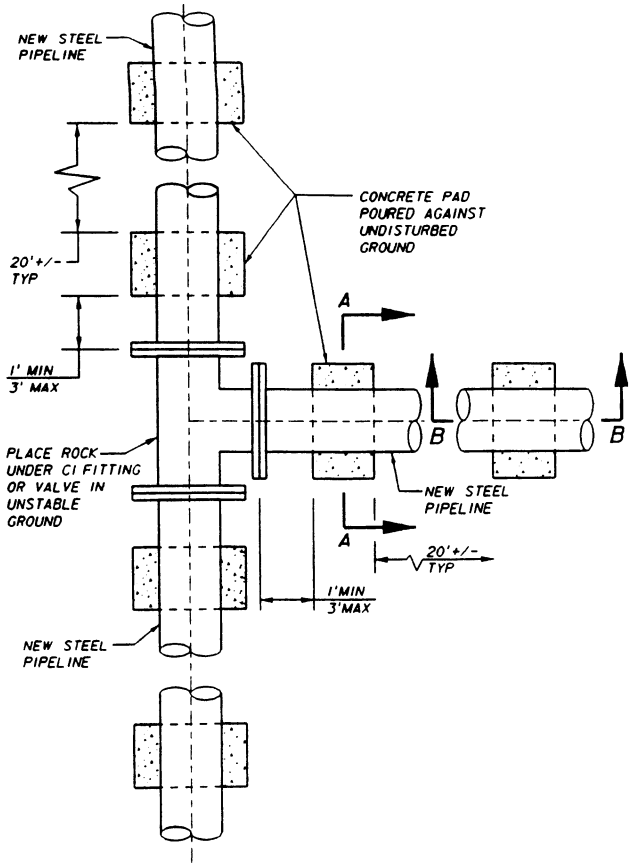

NEW STEEL PIPELINE INSTALLATION

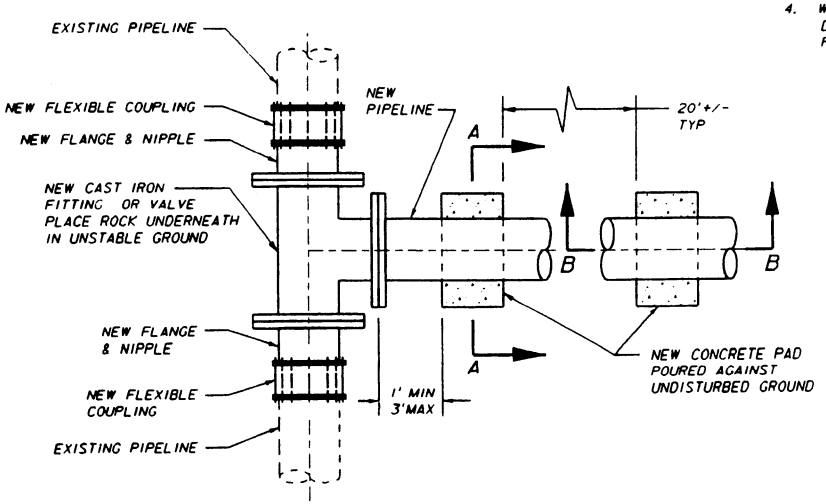

CONNECTION TO EXISTING STEEL PIPELINE

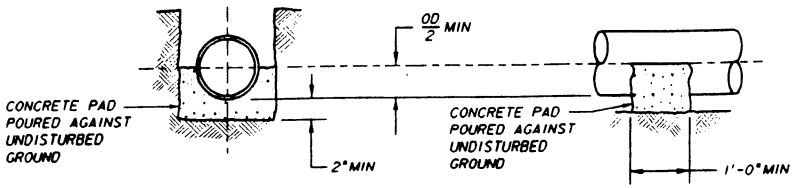

SECTION A-A

SECTION B-B

NOTES

1. CLASS "C" CONCRETE PAD TO BE POURED AGAINST UNDISTURBED TRENCH WALL AFTER PIPE IS INSTALLED & FLANGE CONNECTION IS MADE TO CI FITTING OR VALVE.
2. PAD SHALL BE POURED TO AVOID INTERFERENCE WITH CONNECTIONS OR SPECIAL FITTINGS.
3. VALVES 12" & SMALLER SHALL BE SUPORTED AS SHOWN HEREON. REFER TO DWGS B-255 & DWG B-279 FOR ADDITIONAL SUPPORTS FOR VALVES 14" & LARGER.
4. WHERE VALVES ARE CALLED OUT ON CONSTRUCTION DRAWINGS BOLT VALVES TO CI FITTINGS & THEN PROCEED WITH SUPPORT ASSEMBLY AS SHOWN.

REVISIONS					APPROVALS		
NO.	DATE	INITIAL	DESCRIPTION	APP'D	DATE		INITIAL	DATE
1	11/18/98	GR	REDRAWN W/CADD ON MYLAR	WJB	4/27/99	DESIGN	JVS	
						CONSTRUCTION	RKM	
						INSPECTION		
						OPERATIONS	CAG	
						SUBMITTED	LAM	3/18/77

EASTERN MUNICIPAL WATER DISTRICT

EASTERN MUNICIPAL WATER DISTRICT

EASTERN MUNICIPAL WATER DISTRICT
STANDARD DRAWING

STEEL PIPELINE PIPE PAD OR COUPLING FOR CAST IRON FITTINGS

REFERENCES:
FILE I.D.: d_standards: b563.dgn

SCALE: NONE
DRAWN BY: MCA

RECOMMENDED _____ DIRECTOR OF ENGINEERING _____ DATE

APPROVED Doyle F. Boen 3/18/77
GENERAL MANAGER & CHIEF ENGINEER DATE

B-563

1

OUTLET ORIENTATION

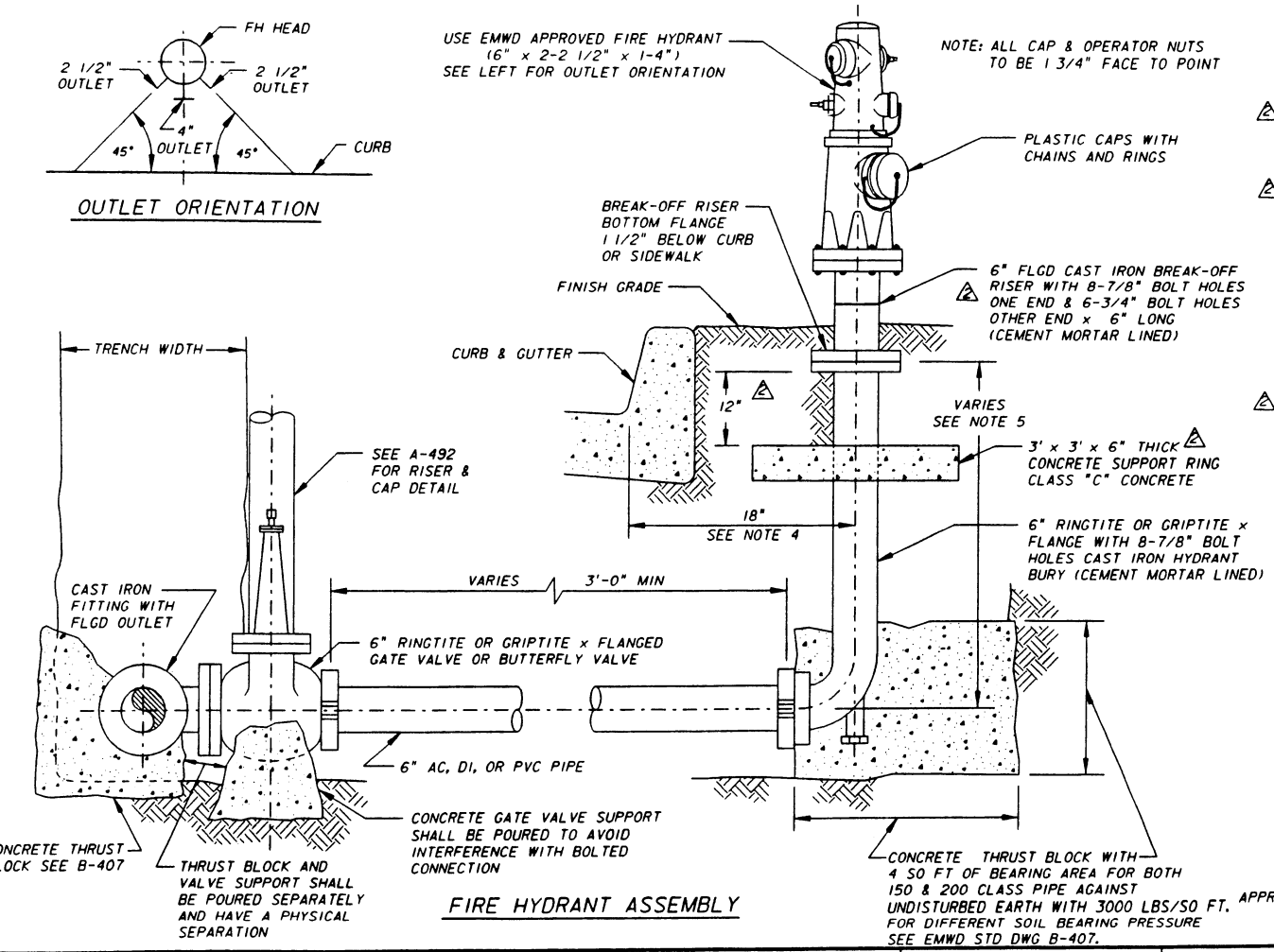

FIRE HYDRANT ASSEMBLY

GENERAL NOTES

1. HYDRANT TO BE PAINTED WITH REFLECTIVE SCOTCHLITE S-368 OR S-370, OR APPROVED EQUAL.
2. USE THRUST BLOCKS PER B-407 FOR ACP. USE RESTRAINED JOINTS PER B-663 FOR PVC AND DUCTILE IRON. CONCRETE FOR THRUST BLOCKS AND SUPPORTS TO BE CLASS "C" (2000 PSI) CONCRETE.
3. ALTERNATE MATERIALS MAY BE USED WHEN SPECIFIED.
4. FIRE HYDRANT PLACEMENT:
   - A. CURB AND SIDEWALK SEPARATED: FIRE HYDRANT TO BE 18" BEHIND CURB FACE, AS SHOWN.
   - B. CURB AND SIDEWALK ADJACENT: FIRE HYDRANT TO BE 18" BEHIND SIDEWALK, BUT NOT LESS THAN 8" WITHIN THE ROAD RIGHT-OF-WAY.
   - C. SIDEWALK FULL WIDTH OF RIGHT-OF-WAY: FIRE HYDRANT TO BE 18" BEHIND THE CURB.
   - D. NO CURBS OR SIDEWALKS PROPOSED: FIRE HYDRANT TO BE 18" WITHIN THE ROAD RIGHT-OF-WAY.
5. LENGTH OF FIRE HYDRANT BURY TO BE DETERMINED BY THE DIFFERENCE IN ELEVATION BETWEEN THE CENTER GRADE OF THE PIPELINE OUTLET AND THE BREAK-OFF RISER BOTTOM FLANGE.
6. FIRE HYDRANT LOCATION:
   - A. STREET INTERSECTIONS: FIRE HYDRANT TO BE 5' PAST THE CURB RETURN.
   - B. OTHER THAN STREET INTERSECTIONS: FIRE HYDRANT TO BE ON A LOT LINE AS SHOWN ON PLANS.
7. ALL HYDRANTS TO HAVE A "BLUE DOT" MARKER PER CITY OF HEMET STANDARD W-700A ("STD").
8. ALL BURIED BARE METAL SHALL BE FIELD COATED PER EMWD SPECIFICATIONS AND APPROVED MATERIALS.

APPROVED: Bernard Phillips DATE: 5/5/93
CITY OF HEMET

REVISIONS					
NO.	DATE	INITIAL	DESCRIPTION	APP'D	DATE
1	4/8/93		REDRAWN W/CAD ON MYLAR	VJB	7/93
2	5/17/00	GR	REV CALLOUT, NOTES 2, 3, 5, ADD CONC SPPT&DIM	VJB	5/19/00

APPROVALS		
	INITIAL	DATE
DESIGN		
CONSTRUCTION		
INSPECTION		
OPERATIONS	PR	5/18/93
SUBMITTED	VJB	5/19/93

EASTERN MUNICIPAL WATER DISTRICT

EASTERN MUNICIPAL WATER DISTRICT
STANDARD DRAWING

6" x 2-2 1/2 " x 1-4" FIRE HYDRANT INSTALLATION - CITY OF HEMET AC, PVC, DI PIPE

REFERENCES: ORIGINAL DRAWN BY JMA 11/77
FILE I.D.: D_STANDARDS/B566.DGN

SCALE: NONE
DRAWN BY

RECOMMENDED Joseph D. Van Sickle 6/1/93
DIRECTOR OF ENGINEERING DATE

APPROVED G. Hoyte Rugge 7/2/93
CHIEF ENGINEER DATE

B-566 2

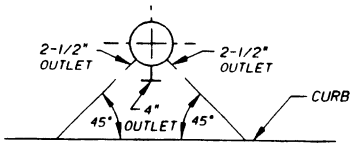

OUTLET ORIENTATION

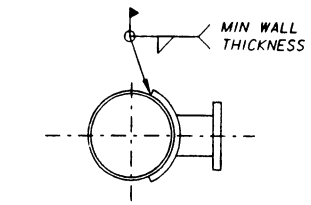

USE 6" FLANGED SADDLE OUTLET FOR INSTALLATION ON 12" OR LARGER PIPELINE

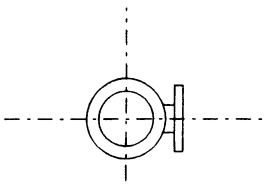

USE CAST IRON TEE FOR INSTALLATION ON 6" OR 8" PIPELINE

PIPELINE INSTALLATION

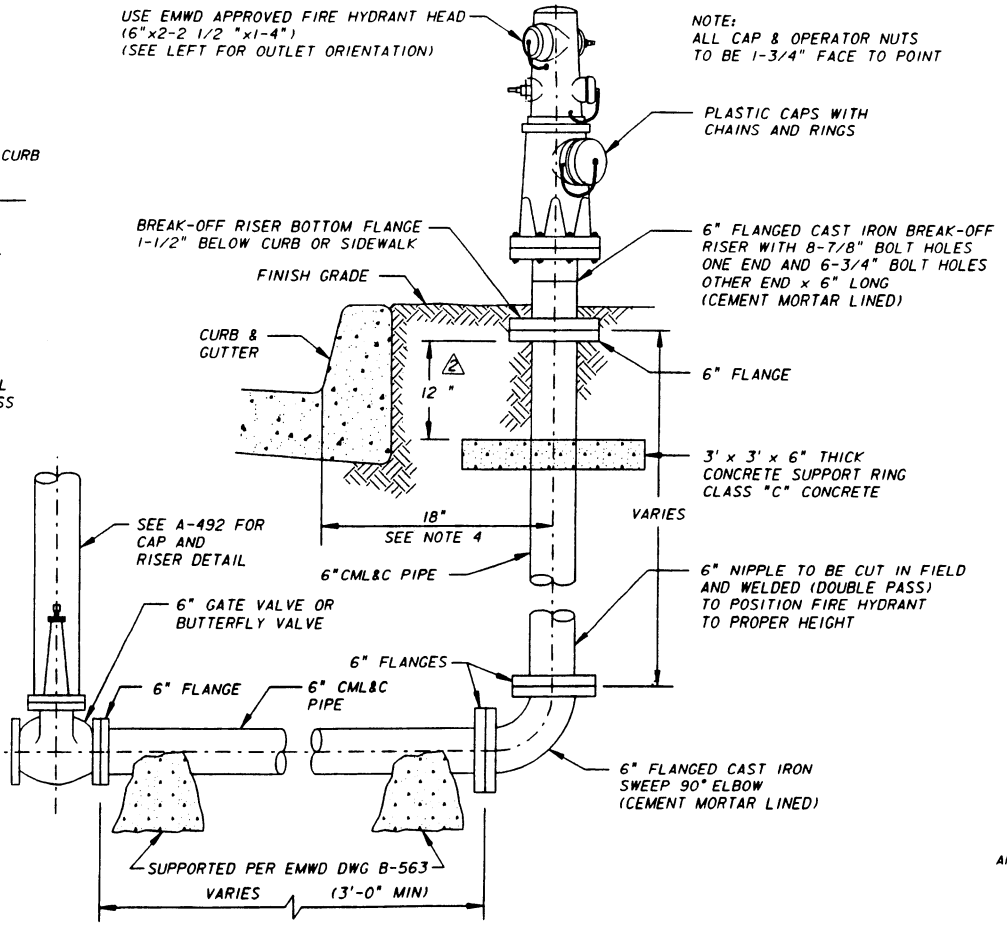

FIRE HYDRANT ASSEMBLY

GENERAL NOTES

1. FIRE HYDRANT TO BE PAINTED WITH REFLECTIVE SCOTCHLITE S-368, S-370, OR APPROVED EQUAL.
2. ALL FLANGES SHALL BE FULL WELDED (DOUBLE PASS) AND COATED IN THE FIELD AS DIRECTED BY THE ENGINEER PER NOTE 6.
3. ALTERNATE MATERIALS MAY USED WHEN SPECIFIED.
4. FIRE HYDRANT PLACEMENT:
   A. CURB AND SIDEWALK SEPARATED: FIRE HYDRANT TO BE 18" BEHIND CURB FACE, AS SHOWN.
   B. CURB AND SIDEWALK ADJACENT: FIRE HYDRANT TO BE 18" BEHIND SIDEWALK BUT NOT LESS THAN 8" WITHIN THE ROAD RIGHT-OF WAY.
   C. SIDEWALK FULL WIDTH OF RIGHT-OF-WAY: FIRE HYDRANT TO BE 18" BEHIND CURB.
   D. NO CURBS OR SIDEWALKS PROPOSED: FIRE HYDRANT TO BE 18" WITHIN THE ROAD RIGHT-OF-WAY.
5. FIRE HYDRANT LOCATION:
   A. STREET INTERSECTIONS: FIRE HYDRANT TO BE 5' PAST THE CURB RETURN.
   B. OTHER THAN STREET INTERSECTIONS: FIRE HYDRANT TO BE ON A LOT LINE AS SHOWN ON PLANS.
6. ALL BURIED BARE METAL SHALL BE FIELD COATED PER EMWD SPECIFICATIONS AND APPROVED MATERIALS.
7. ALL FIRE HYDRANTS TO HAVE "BLUE DOT" MARKER PER CITY OF HEMET STD W-700A ("STD").

APPROVED: Bernard Phillips DATE: 5/5/93

CITY OF HEMET

SUPER FIRE HYDRANT

REVISIONS					
NO.	DATE	INITIAL	DESCRIPTION	APP'D	DATE
1	4/8/93		REDRAWN W/CADD ON MYLAR	VJB	7/93
2	5/17/00	GR	REV ALL FONT, ADD CONC SUPPORT & DIM	VJB	5/19/00

APPROVALS		
	INITIAL	DATE
DESIGN		
CONSTRUCTION		
INSPECTION		
OPERATIONS	PR	5/18/93
SUBMITTED	VJB	5/19/93

EASTERN MUNICIPAL WATER DISTRICT

EASTERN MUNICIPAL WATER DISTRICT
STANDARD DRAWING

6" x 2-2 1/2" x 1-4" FIRE HYDRANT INSTALLATION CITY OF HEMET - STEEL PIPE

REFERENCES: ORIG DRAWN BY JMA 11/77
FILE I.D.: D_STANDARDS/B567.DGN

SCALE: NONE
DRAWN BY

RECOMMENDED Joseph D. Van Sichle 6/3/93
DIRECTOR OF ENGINEERING — DATE

APPROVED G. Hoote Rugge 7/2/93
CHIEF ENGINEER — DATE

B-567 2

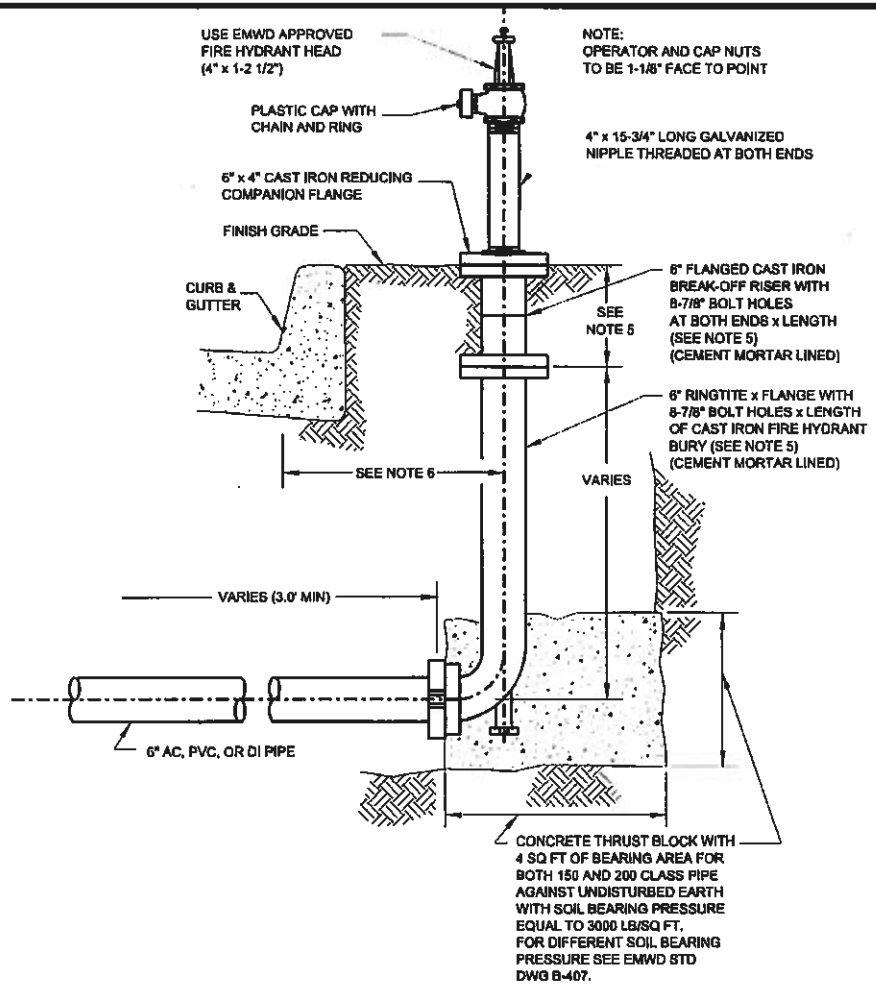

GENERAL NOTES

1. *PAINTS: HYDRANTS TO BE PAINTED WITH APPROVED YELLOW.*
2. *USE THRUST BLOCKS PER B-407 FOR ACP. USE RESTRAINED JOINTS PER B-883 FOR PVC AND DUCTILE IRON. CONCRETE FOR THRUST BLOCKS AND SUPPORTS TO BE CLASS "C" (2000 PSI) CONCRETE.*
3. *ALTERNATE MATERIALS MAY BE USED WHEN SPECIFIED.*
4. *FIELD COATING FOR EXPOSED PIPE SHALL BE PER EMWD SPECIFICATIONS AND APPROVED MATERIALS.*
5. *LENGTH OF BREAK-OFF RISER TO BE DETERMINED BY THE DIFFERENCE IN ELEVATION BETWEEN THE CENTER GRADE OF THE PIPELINE OUTLET AND THE TOP OF THE CURB OR PROPOSED GRADE, LESS THE LENGTH FOR THE FIRE HYDRANT BURY. IF BREAK-OFF RISER EXCEEDS 18", USE NEXT 1 FT LONGER BURY.*
6. *BLOW-OFF LOCATION: TEMPORARY BLOW-OFFS SHALL BE LOCATED SO THEY DO NOT INTERFERE WITH FUTFURE IMPROVEMENTS THAT WILL BE INSTALLED PRIOR TO THE WATER MAIN EXTENSION.*
7. *WHEN NO CURBS OR SIDEWALKS ARE PROPOSED BLOW-OFF IS TO BE PLACED 18" WITHIN THE ROAD RIGHT-OF-WAY.*

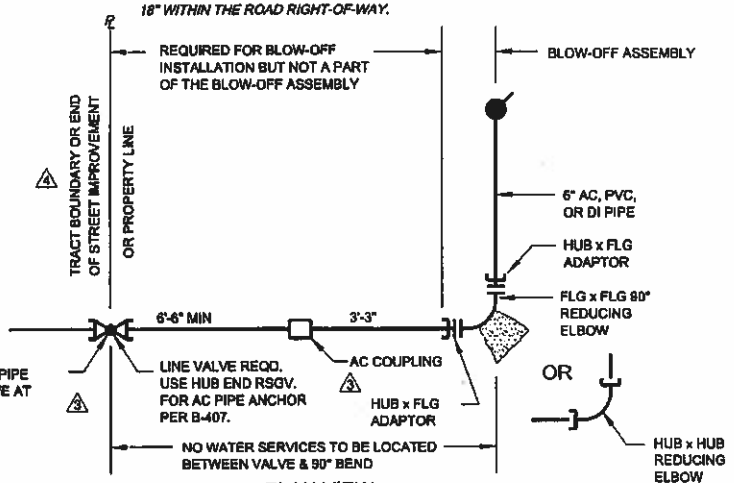

PLAN VIEW

REVISIONS					
NO.	DATE	INITIAL	DESCRIPTION	APP'D	DATE
1	4/19/93		REDRAWN W/CADD ON MYLAR	VJB	5/19/93
2	4/17/00	GR	REV ALL FONT, NOTE 2 & ADDED NOTE 7	VJB	5/19/00
3	10/28/03	CM	REV. NOTES FOR AC PIPE &VALVE LOCATION	VJB	10/28/03
4	2/23/11	GS	REVISED TRACT BOUNDARY NOTE	SMM	02/28/11

APPROVALS		
	INITIAL	DATE
DESIGN		
CONSTRUCTION		
INSPECTION		
OPERATIONS	PR	5/18/93
SUBMITTED	VJB	5/19/93

EASTERN MUNICIPAL WATER DISTRICT

REFERENCES: ORIG DRAWN BY JMA 11/77
FILE I.D.: \kauai\eng\std dwgs\b568.dgn

SCALE: NONE
DRAWN BY GS

RECOMMENDED Joseph D. Van Sichle, DIRECTOR OF ENGINEERING 6/1/93 DATE

APPROVED G. Hoole Rugge, CHIEF ENGINEER 7/2/93 DATE

EASTERN MUNICIPAL WATER DISTRICT
STANDARD DRAWING

6" x 1-2 1/2" BLOW-OFF TEMPORARY END INSTALLATION - AC, PVC, DI PIPE

B-568 4

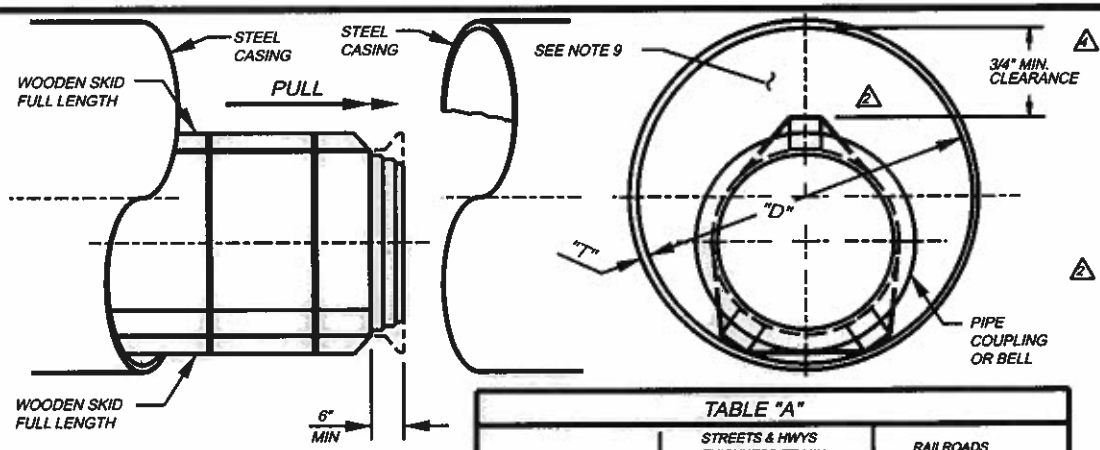

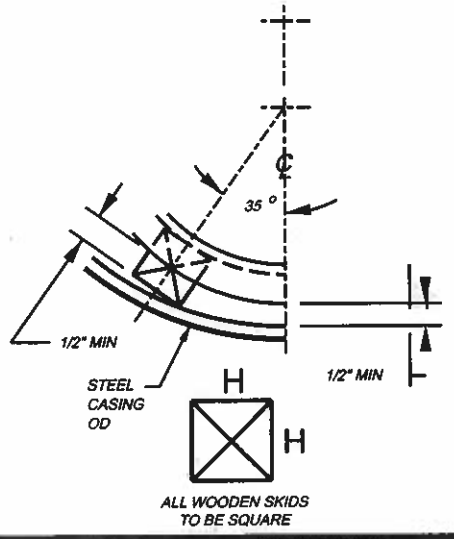

TABLE "A"			
	STREETS & HWYS THICKNESS "T" MIN		RAILROADS
DIAMETER "D" (INCHES)	UP TO 150' LENGTH	OVER 150' LENGTH	THICKNESS "T" (MINIMUM)
4'-10" ID	1/4"	1/4"	4"-12":1/4"
12"-16" OD	1/4"	1/4"	14"-16":9/32"
18"-20" OD	1/4"	1/4"	18":5/16" 20":11/32"
22" OD	1/4"	1/4"	3/8"
24" OD	1/4"	1/4"	13/32"
26" OD	1/4"	1/4"	7/16"
28" OD	1/4"	1/4"	15/32"
30" OD	3/8"	1/2"	15/32"
32" OD	3/8"	1/2"	1/2"
34"-36" OD	3/8"	1/2"	17/32"
38" OD	3/8"	1/2"	9/16"
40" OD	1/2"	3/4"	9/16"
42" OD	1/2"	3/4"	9/16"
48"-60" OD	1/2"	3/4"	AS REQUIRED
62"-72" OD	3/4"	3/4"	AS REQUIRED

GENERAL NOTES

1. THE STEEL CASING SHALL BE INSTALLED BY MEANS OF JACKING OR DRY BORING, EXCEPT WHERE SPECIFICALLY NOTED ON THE PLANS TO BE INSTALLED BY OPEN TRENCH CONSTRUCTION.
2. CASING DIAMETER SHALL BE A MINIMUM OF 4 INCHES GREATER THAN THE OUTSIDE BELL DIAMETER.
3. MINIMUM CASING THICKNESS SPECIFIED IN "TABLE A" IS REQUIRED FOR CASING IN PLACE, AND DOES NOT ACCOUNT FOR CONSTRUCTION LOADS. THE CONTRACTOR SHALL BE SOLELY RESPONSIBLE FOR THE STRUCTURAL SUFFICIENCY OF THE CASING DURING CONSTRUCTION, AND ALSO THE METHOD OF INSTALLATION.
4. PRESSURE PIPELINES SHALL BE SUPPORTED ON PIPE SKIDS SUBJECT TO APPROVAL OF THE ENGINEER. CML&C PRESSURE PIPE MAY REST ON THE BOTTOM OF THE CASING, BUT SHALL NOT BE DRAGGED INTO POSITION WITHOUT PIPE SKIDS.
5. ALL SKIDS ARE TO BE SQUARE IN CROSS SECTION AND MAY BE MADE FROM REDWOOD, #2 OR BETTER DOUGLAS FIR, SOUND MATERIAL, TO BE WALMANIZED OR CREOSOTED (REDWOOD NEED NOT BE TREATED).
6. SKIDS SHALL BE ATTACHED TO PIPE BY STRAPPING WITH A STANDARD STRAPPING MACHINE TO HOLD SKIDS IN PLACE DURING PULLING OPERATIONS. USE STAINLESS BAND, OR METHOD OF "CLEATING" SKIDS TOGETHER, AS APPROVED.
7. FLEXIBLE PIPE (PVC, ABS, ETC.) SHALL HAVE SPACER GUIDE ALONG THE TOP TO PREVENT PIPE FROM FLOATING. PIPE WITHIN CASING TO BE BONDED TOGETHER AT THE JOINTS FOR AN INTEGRAL UNIT PER MANUFACTURER'S RECOMMENDATONS. TWO APPROVED FLEXIBLE COUPLINGS SHALL BE USED AT BOTH ENDS OF CASING.
8. NOTICE AS REQUIRED BY THE DISTRICT SHALL BE GIVEN PRIOR TO CONSTRUCTION, FOR THE DISTRICT INSPECTION OF CASING PIPE AND CARRIER PIPE INSTALLATION. THE AS BUILT LOCATION AND GRADE OF CASING PIPE SHALL BE APPROVED BY THE DISTRICT PRIOR TO INSTALLATION OF THE CARRIER PIPE. DEPARTURES FROM PLANNED LOCATION OR GRADE OF THE CASING PIPE SHALL REQUIRE A FIELD SURVEY OF CARRIER PIPE REDESIGN IF FEASIBLE, OR ABANDONMENT IN FAVOR OF A NEW INSTALLATION.
9. TOTAL ANNULAR SPACE SHALL BE GROUTED PER EMWD SPECS, SECTION 03604 UNLESS SPECIFIED ON CONSTRUCTION DRAWINGS.
10. ALL JOINTS ON STEEL CASING SHALL BE FULL WELD DOUBLE PASS

REVISIONS					
NO.	DATE	INITIAL	DESCRIPTION	APP'D	DATE
1	11/20/98	GR	REDRAWN W/CADD ON MYLAR	VB	
2	9/04/03	CM	REVISE NOTES & ADDED TOP SKID		10-6-03
3	2/08/06	JJW	ADDED NOTE	JW	2/8/06
4	4/14/10	RE	REVISED NOTE	SMM	04/14/10

APPROVALS		
	INITIAL	DATE
DESIGN	JWS	
CONSTRUCTION	B.L.M	
INSPECTION		
OPERATIONS	CAG	
SUBMITTED	LAM	6/20/72

EASTERN MUNICIPAL WATER DISTRICT

EASTERN MUNICIPAL WATER DISTRICT STANDARD DRAWING

STEEL PIPE CASING WATER PIPELINE

REFERENCES: ORIGINAL B-575 DRAWN 3/21/72

FILE I.D.: \kaua\eng\std dwgs\b575.dgn

SCALE: NONE

DRAWN BY McM

APPROVED Doyle F. Boon
GENERAL MANAGER AND CHIEF ENGINEER DATE

B-575 4

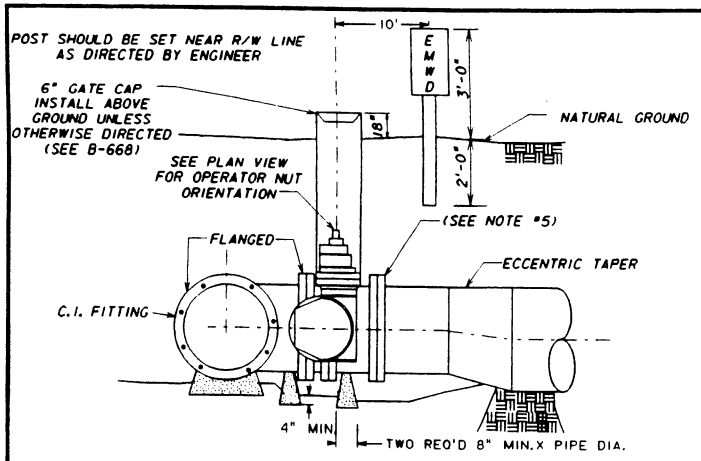

C.I. FITTING INSTALLATION

SHOWING OPEN FIELD

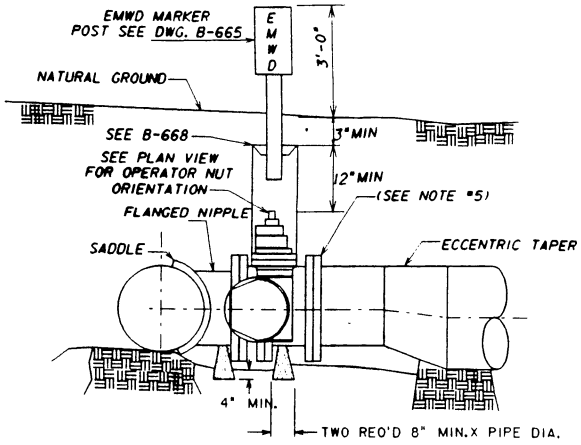

SADDLE OUTLET INSTALLATION

SHOWING UNIMPROVED ROADWAY

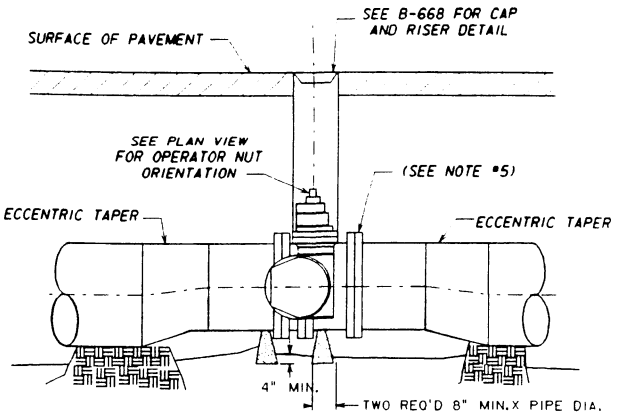

IN LINE VALVE INSTALLATION

SHOWING PAVED STREET

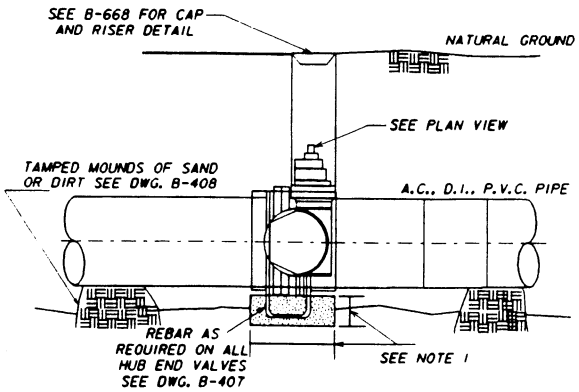

A.C. - D.I. - PVC PIPELINE INSTALLATION

NOTES

1. ALL FLEXIBLE JOINTS IN PIPELINES FROM VALVES OR IN BRANCH LINES SHALL BE WELDED OR RESTRAINED TO PROVIDE ANCHORAGE FOR UNBALANCED FORCES.
2. CONCRETE SUPPORTS TO AVOID INTERFERENCE WITH BOLTED OR HUB END CONNECTIONS AND SHALL BE POURED AGAINST UNDISTURBED EARTH.
3. ALL STEEL FLANGES SHALL BE PRIMED AND COATED PER EMWD SPECIFICATIONS.
4. ALL STEEL PIPE AND FITTINGS SHALL BE COATED WITH THE SAME MATERIAL AS SUPPLIED ON THE PIPE.
5. USE VICTAULIC COUPLINGS ONLY IF REQUESTED BY THE ENGINEER OR IF SPECIFICALLY NOTED ON THE PLANS.

VALVE OPERATOR NUT TO BE PLACED COUNTER CLOCKWISE OF VALVE.

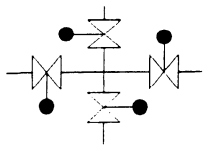

PLAN VIEW

REVISIONS					
NO.	DATE	INITIAL	DESCRIPTION	APP'D	DATE
1	10-97	TS	REDRAWN W/ CADD ON MYLAR	VJB	1/29/98

APPROVALS		
	INITIAL	DATE
DESIGN	JVS	
CONSTRUCTION		
INSPECTION		
OPERATIONS		
SUBMITTED	LM	3/17/81

REFERENCES: ORIGINAL B-577 DRAWN 7/15/80

FILE I.D.: D_STANDARDS; B577.DGN

SCALE: NONE

DRAWN BY TS

EASTERN MUNICIPAL WATER DISTRICT
STANDARD DRAWING

INSTALLATION OF BUTTERFLY VALVES

APPROVED James H. Bunts JR. ASST. GENERAL MANAGER - ENGINEERING DATE

B-577 1

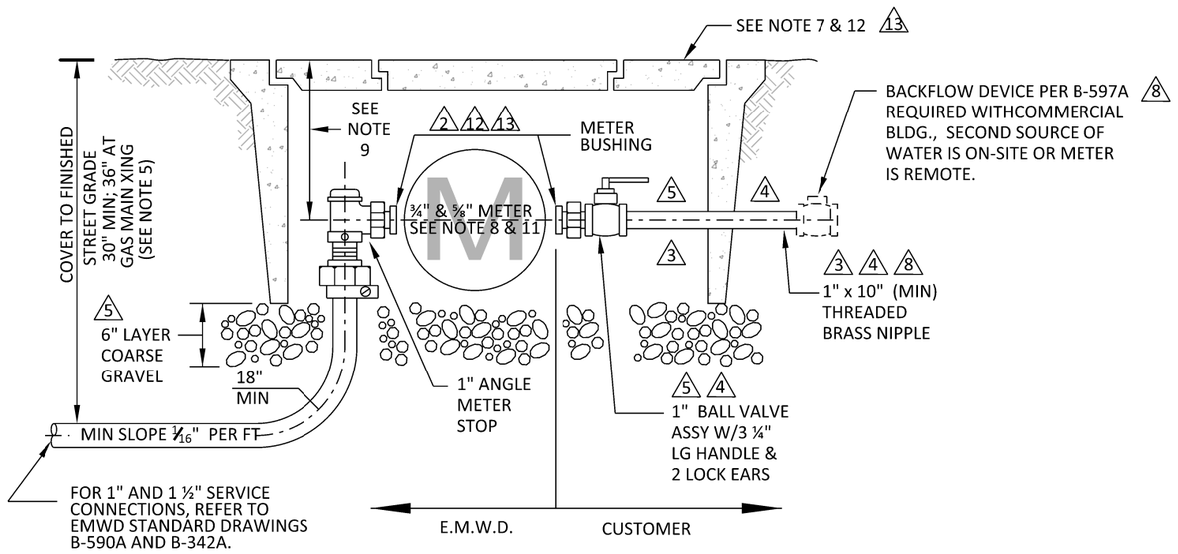

METER INSTALLATION

1" IRON PIPE SIZE
NOT TO SCALE

FLOW RATE TABLE 12 13 14

LATERAL SIZE	METER SIZE	FLOWRATE (GPM)	VELOCITY (ft/s)	METER LENGTH
1" COPPER	⅝" MULTIJET	15	6.20	7 ½"
1 ½" COPPER	⅝" MULTIJET	15	2.80	7 ½"
1" COPPER	¾" MULTIJET	20	8.25	7 ½"
1 ½" COPPER	¾" MULTIJET	20	3.70	7 ½"

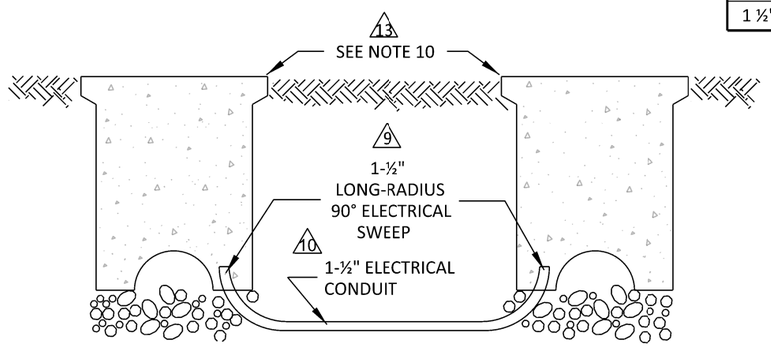

GENERAL NOTES 13

13 1. ALL PIPE AND FITTINGS BETWEEN AND INCLUDING THE CORPORATION STOP AND GATE VALVE SHALL :
   A. BE MADE OF BRASS OR BRONZE ;
   B. BE OF THE BANDED PATTERN ;
   C. BE DESIGNED FOR A MIN OF 175 PSI (COLD) WATER WORKING PRESSURE.

2. PRESSURE TEST PER EMWD SPECIFICATIONS.

6 3. ALL LISTED MATERIALS TO BE PER EMWD APPROVED MATERIAL LIST.

5 4. CORPORATION STOP AND FITTINGS AT THE PIPELINE SHALL BE PRIMED AND WRAPPED WITH APPROVED COAL TAR RESIN TAPE.

15 5. ALL SERVICE PIPE AND TUBING SHALL BE LAID ON A POSITIVE SLOPE UP FROM THE WATER MAIN TO THE METER. NO DIPS OR POCKETS IN THE LINE WILL BE PERMITTED. 36" COVER SHALL BE AT GAS MAIN CROSSINGS.

6. THREAD NOTATION SHOWN THUS :
   IP = IRON PIPE THREAD
   CS = CORPORATION STOP (MUELLER) THREAD ;
   PJ = PACK JOINT

3 7. METER BOXES SHALL BE EMWD APPROVED 12" x 20" COMPLETE WITH TWO PIECE COVER AND LID WITH AMR/AMI ANTENNA PORT (SEE NOTE 10 AND "F" FOR SIDEWALK INSTALLATION)

15 8. WHEN METER IS FURNISHED BY OTHERS, USE 1" PVC NIPPLE CONSISTING OF (2) 1" MIP x S ADAPTERS CL 200. SEE FLOW RATE TABLE FOR METER LENGTHS. LOCK ANGLE METER STOP CLOSED WITH LEAD SEAL AND 3- STRAND WIRE.

9. METER PORT HOLES CENTER TO BE INSTALLED 9-½" BELOW TOP OF METER BOX.

13 9 10. INSTALL 1-½" PVC SCH. 40 ELECTRICAL CONDUIT BETWEEN ALL METER BOXES THAT ARE LOCATED NEAR PL WITHNIN 10' OF EA. OTHER. TAPE END OF SWEEPS PREVENTING DEBRIS FROM ENTERING CONDUIT. PLACE SWEEPS INSIDE AND AGAINST SIDE OF METER BOX.

13 12 11. SYSTEMS WITH ONSITE PUMPS SHALL NOT EXCEED 5 FPS VELOCITY WITHIN THE SERVICE LATERAL. SYSTEMS WITHOUT PUMPS, SHALL NOT EXCEED 10 FPS (SEE B-590A).

13 12. CONTRACTOR SHALL RETURN AFTER ROAD SHOULDER OR PARKWAY IS COMPLETE TO INSTALL METER BOX, AND SHALL BE RESPONSIBLE FOR COORDINATING WORK OF OTHER CONTRACTORS FOR SAFEGUARDING SERVICES UNTIL METER BOXES ARE SET.

PLACEMENT OF METER BOX

A. PLACE FRONT EDGE OF METER BOX 6" MAX BEHIND EXISTING OR PROPOSED 6' OR 8' SIDEWALKS.

B. WHEN PROPOSED OR EXISTING SIDEWALK IS 12' WIDE PLACE FRONT EDGE OF METER BOX 6" MAX BEHIND CURB USING APPROPRIATE METER BOX (SEE NOTE 10).

C. WHEN NO SIDEWALKS IS PROPOSED PLACE FRONT EDGE OF METER BOX 6.5' BEHIND CURB FACE.

D. WHEN NO CURBS ARE EXISTING OR TO BEING INSTALLED UPON COMPLETION OF THE WATER SYSTEM PLACE BACK EDGE OF METER BOX ON PROPERY LINE.

7 E. ADJOINING LOT METER BOXES SHALL BE PLACED TOGETHER AT PROPERTY LINE.

13 F. WHEN INSTALLED IN CONCRETE (SIDEWALK) USE EMWD APPROVED 17" x 30" METER BOX COMPLETE WITH COVER AND LID.

REVISIONS

NO.	DATE	INITIAL	DESCRIPTION	APP'D	DATE
15	12/9/16	GS	REVISED NOTE 5, 8, AND LOGO	AGA	12/12/16
14	5/15/15	GS	ADDED METER LENGTH TO METER DATA TABLE	AGA	5/15/15
13	4/1/2014	GS	ADDED NOTE "F", 13, REVISED TITLE, TABLE AND FONT SIZE	AGA	10/30/14
12	7/19/13	GS	ADDED 3/4" METER, FLOWRATE TABLE, NOTE, REMOVE ALL CONN. INFORMATION, B590A REFFERENCE, AND REVISED TITLE	AGA	7/19/13

REFERENCES: (SUPERCEDES B-340) ORIG DRAWN 6/68
FILE I.D.: \kauai\eng\std dwgs\B-590.dgn
SCALE: NONE
DRAWN BY: KER

APPROVALS

	INITIAL	DATE
DESIGN		
CONSTRUCTION		
INSPECTION		
OPERATIONS	ML	10/19/95
SUBMITTED	VJB	9/21/95

RECOMMENDED Joseph D. Van Sickle 10/19/95
DIRECTOR OF ENGINEERING DATE

emwd EASTERN MUNICIPAL WATER DISTRICT

EASTERN MUNICIPAL WATER DISTRICT
STANDARD DRAWING

5/8" & 3/4" METER INSTALLATION 2 12 13

APPROVED G. Hoote Rugge 10/20/95
CHIEF ENGINEER DATE

B-590 15

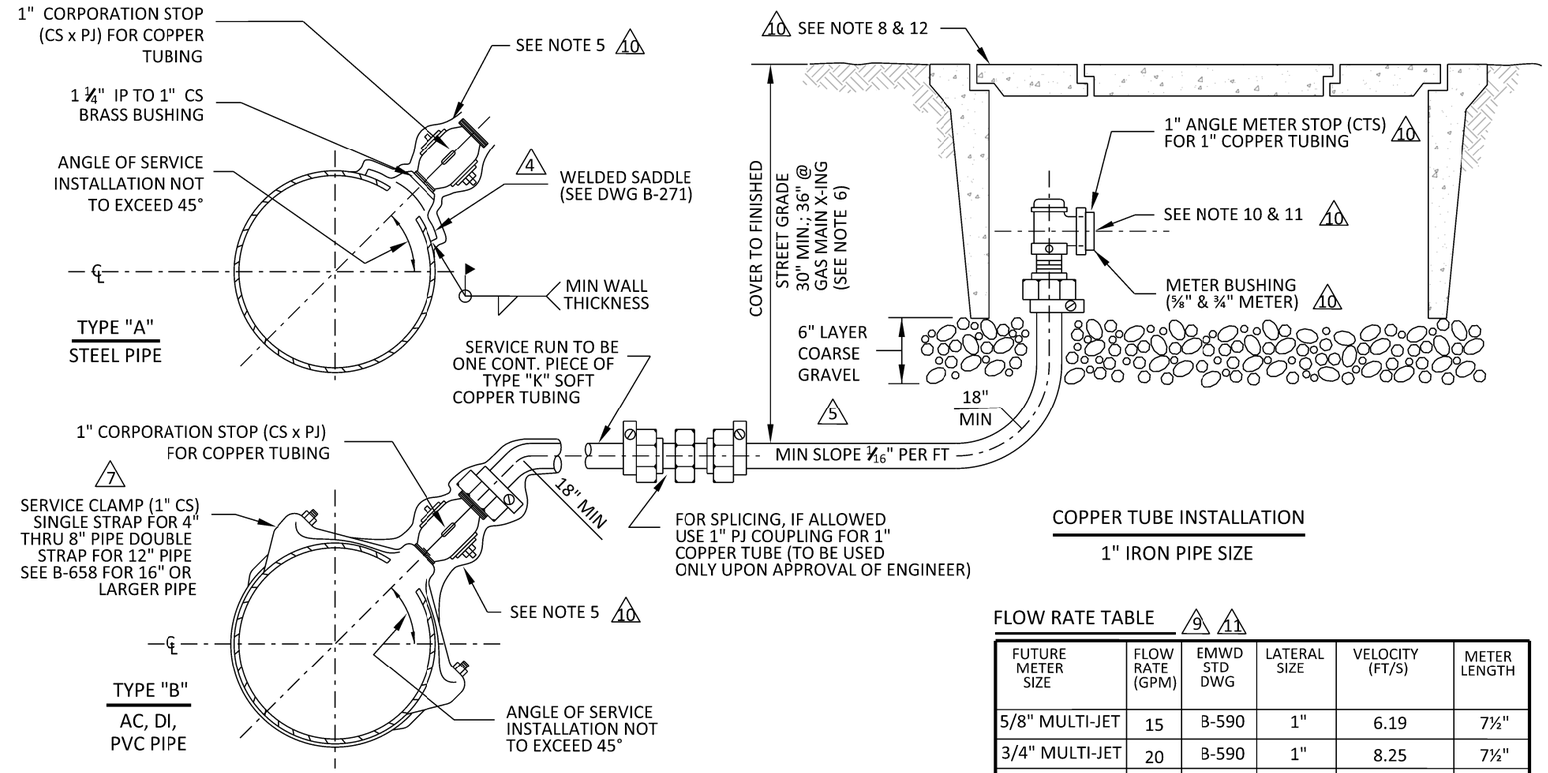

COPPER TUBE INSTALLATION

1" IRON PIPE SIZE

FLOW RATE TABLE 9 11

FUTURE METER SIZE	FLOW RATE (GPM)	EMWD STD DWG	LATERAL SIZE	VELOCITY (FT/S)	METER LENGTH
5/8" MULTI-JET	15	B-590	1"	6.19	7½"
3/4" MULTI-JET	20	B-590	1"	8.25	7½"
1" MULTI-JET	30	B-591	1½"	SEE NOTE 11	10¾" 10

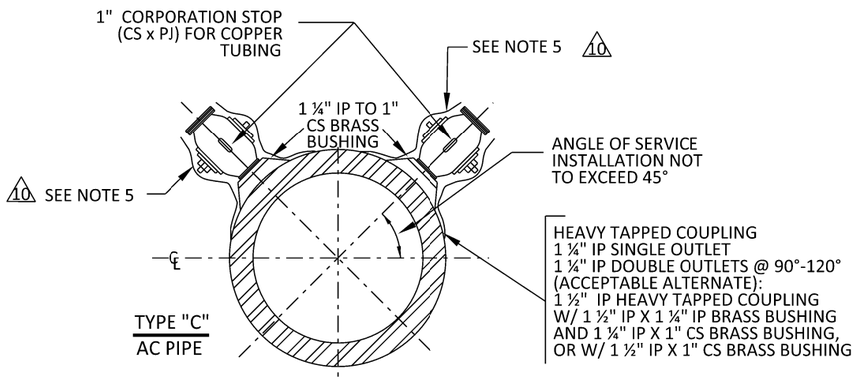

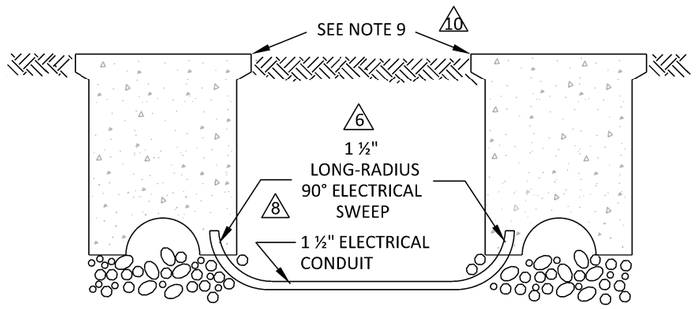

GENERAL NOTES 10

1. ALL FITTINGS BETWEEN AND INCLUDING THE CORPORATION STOP AND GATE VALVE SHALL :
   A. BE MADE OF BRASS OR BRONZE ;
   B. BE OF THE BANDED PATTERN ;
   C. BE DESIGNED FOR A MIN OF 175 psi (COLD WATER) WORKING PRESSURE.
4 2. PRESSURE TEST PER EMWD SPECIFICATIONS.
10 3. ALL BARE IRON STEEL SHALL BE COATED WITH CEMENT MORTAR PER EMWD SPECIFICATIONS.
10 4. ALL LISTED MATERIALS TO BE PER EMWD APPROVED MATERIAL LIST.
5. CORPORATION STOP, FITTINGS, AND SERVICE LINE WITHIN 3 FEET OF SADDLE SHALL BE PRIMED AND WRAPPED WITH APPROVED COAL TAR RESIN TAPE.
12 6. ALL SERVICE PIPE AND TUBING SHALL BE LAID ON A POSITIVE SLOPE UP FROM THE WATER MAIN TO THE METER. NO DIPS OR POCKETS IN THE LINE WILL BE PERMITTED. 36" COVER SHALL BE AT GAS MAIN CROSSINGS.
7. THREAD NOTATION SHOWN THUS :
   IP = IRON PIPE THREAD ;
   CS = CORPORATION STOP (MUELLER) THREAD ;
   PJ = PACK JOINT
10 3 8. METER BOX SHALL BE EMWD APPROVED COMPLETE WITH TWO-PEICE COVER AND LID WITH AMR/AMI ANTENNA PORT PER METER STANDARD DRAWING.
10 9. INSTALL ½" PVC SCH. 40 ELECTRICAL CONDUIT BETWEEN ALL METER BOXES & STUBBED INSIDE, THAT ARE LOCATED NEAR PL WITHNIN 10' OF EACH OTHER. TAPE END OF SWEEPS PREVENTING DEBRIS FROM ENTERING CONDUIT.
9 10. SYSTEMS WITH ONSITE PUMPS SHALL NOT EXCEED 5 FPS VELOCITY WITHIN THE SERVICE LATERAL. SYSTEMS WITHOUT PUMPS, SHALL NOT EXCEED 10 FPS.
9 11. FOR SINGLE FAMILY RESIDENTIAL UNITS, ENGINEER TO VERIFY THE ADEQUACY OF THE SERVICE LATERAL SIZE TO ALLOW FOR OPERATION OF RESIDENTIAL FIRE SPRINKLER SYSTEM. FOR COMMERCIAL AND INDUSTRIAL APPLICATIONS, SERVICE LATERAL SIZES WILL BE BASED ON VELOCITIES BEING UNDER 10 FTS.
10 12. CONTRACTOR SHALL RETURN AFTER ROAD SHOULDER OR PARKWAY IS COMPLETE TO INSTALL METER BOX, AND SHALL BE RESPONSIBLE FOR COORDINATING WORK OF OTHER CONTRACTORS FOR SAFEGUARDING SERVICES UNTIL METER BOXES ARE SET.

PLACEMENT OF METER BOX

A. PLACE FRONT EDGE OF METER BOX 6" MAX BEHIND EXISTING OR PROPOSED 6' OR 8' SIDEWALKS.
B. WHEN PROPOSED OR EXISTING SIDEWALK IS 12' WIDE PLACE FRONT EDGE OF METER BOX 6" BEHIND CURB USING APPROPRIATE METER BOX (SEE NOTE 9).
C. WHEN NO SIDEWALK IS PROPOSED PLACE FRONT EDGEOF METER BOX 6.5' BEHIND CURB FACE.
D. UPON COMPLETION OF THE WATER SYSTEM, WHEN NO CURBS ARE EXISTING NOR WILL BE INSTALLED, PLACE BACK EDGE OF METER BOX ON PROPERTY LINE.
D. UPON COMPLETION OF THE WATER SYSTEM, WHEN NO CURBS ARE EXISTING
10 5 E. A MINIMUM 5' SEPARATION IS TO BE BETWEEN SEWER LATERAL AND WATER SERVICE.
10 F. WHEN INSTALLED IN CONCRETE (SIDEWALK) SEE METER STANDARD DRAWING FOR METER BOX INSTALLATION SPECIFICATIONS.

REVISIONS

NO.	DATE	INITIAL	DESCRIPTION	APP'D	DATE
12	12/9/16	GS	REVISED NOTE 6 AND LOGO	AGA	12/12/16
11	5/15/15	GS	REVISED METER DATA TABLE	AGA	5/15/15
10	4/1/14	GS	ADDED NOTE F, 12, CORRECTED FONT, ADDED NOTE REFERENCE	AGA	10/23/14
9	7/19/13	GS	ADDED NOTE 11, 12, FLOW RATE TABLE, AND REVISED NAME	AGA	7/19/13
8	4-19-12	GS	ADDED ELECTRICAL CONDUIT	SMM	4/20/12

REFERENCES:

FILE I.D.: \kauai\eng\std dwgs\B-590A.dgn

SCALE: NONE

DRAWN BY: KER

APPROVALS

	INITIAL	DATE
DESIGN		
CONSTRUCTION		
INSPECTION		
OPERATIONS	ML	10/19/95
SUBMITTED	VJB	9/21/95

RECOMMENDED Joseph D. VanSickle 10/19/95
DIRECTOR OF ENGINEERING DATE

emwd EASTERN MUNICIPAL WATER DISTRICT

EASTERN MUNICIPAL WATER DISTRICT
STANDARD DRAWING

1" COPPER SERVICE CONNECTION 2 9

APPROVED G. Hoote Rugge 10/20/95
CHIEF ENGINEER DATE

B-590A 12

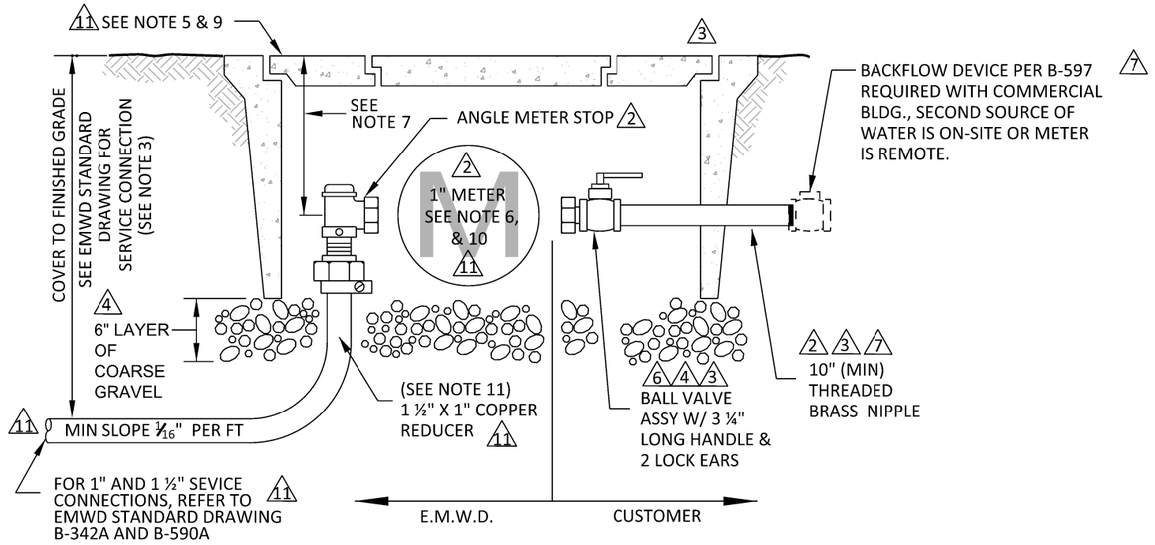

METER INSTALLATION 11

1" IRON PIPE SIZE
NOT TO SCALE

FLOW RATE TABLE 11 14

LATERAL SIZE	METER SIZE	FLOW RATE (GPM)	VELOCITY (ft/s)	APPLICATION	METER LENGTH
1" COPPER	1" MULTIJET	30	12.38	SINGLE FAMILY RESIDENTIAL UNITS	10¾"
1 ½" COPPER	1" MULTIJET	30	5.60	COMMERCIAL, INDUSTRIAL, & LANDSCAPE	10¾"

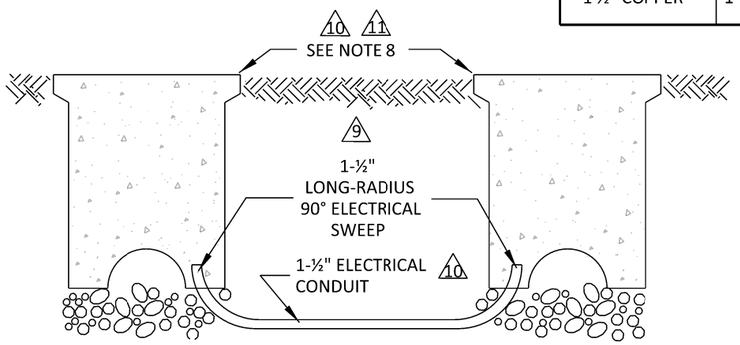

GENERAL NOTES 11

11 1. ALL LISTED MATERIALS TO BE PER EMWD APPROVED MATERIAL LIST.

2. ALL FITTINGS WITHIN METER BOX SHALL:
   A. BE MADE OF BRASS OR BRONZE;
   B. BE OF A BANDED PATTERN;
   C. BE DESIGNED FOR A MINIMUM OF 175 PSI (COLD WATER) WORKING PRESSURE.

13 4 3. ALL SERVICE PIPE AND TUBING SHALL BE LAID ON A POSITIVE SLOPE UP FROM THE WATER MAIN TO THE METER. NO DIPS OR POCKETS IN THE LINE WILL BE PERMITTED. 36" COVER SHALL BE AT GAS MAIN CROSSINGS.

4. THREAD NOTATION SHOWN THUS :
   IP = IRON PIPE THREAD
   CS = CORPORATION STOP (MUELLER) THREAD ;
   PJ = PACK JOINT

2 5. METER BOXES SHALL BE EMWD APPROVED 13" x 24" COMPLETE WITH TWO PIECE COVER AND LID WITH AMR/AMI ANTENNA PORT (SEE NOTE 9 AND F FOR SIDEWALK INSTALLATION)

13 6. WHEN METER IS FURNISHED BY OTHERS, USE 1" PVC NIPPLE CONSISTING OF (2) 1" MIP x S ADAPTERS CL 200 (SEE FLOW RATE TABLE FOR METER LENGTHS). LOCK ANGLE METER STOP CLOSED WITH LEAD SEAL AND 3- STRAND WIRE.

7. METER PORT HOLES CENTER TO BE INSTALLED 9 ¾" BELOW TOP OF METER BOX.

8. INSTALL 1 ½" PVC SCH. 40 ELECTRICAL CONDUIT BETWEEN ALL METER BOXES AND STUBBED INSIDE, THAT ARE LOCATED NEAR PL WITHNIN 10' OF EA. OTHER. TAPE END OF SWEEPS PREVENTING DEBRIS FROM ENTERING CONDUIT. PLACE SWEEPS INSIDE AND AGAINST SIDE OF METER BOX.

9 9. CONTRACTOR SHALL RETURN AFTER ROAD SHOULDER OR PARKWAY IS COMPLETE TO INSTALL METER BOX, AND SHALL BE RESPONSIBLE FOR COORDINATING WORK OF OTHER CONTRACTORS FOR SAFEGUARDING SERVICES UNTIL METER BOXES ARE SET.

10. METER INSTALLATION ON 1 ½" LATERAL WILL REQUIRE AN 1 ½" METER FLANGE X FNPT WITH 1" METER TAIL PIECE. SEE METER MANUFACTURERS SPECIFICATION FOR METER INSTALLATION SPECIFICATIONS.

11 11. 1-½" COPPER SERVICE LATERAL TO BE REDUCED TO 1" COPPER AFTER THE 90° TRANSITION.

PLACEMENT OF METER BOX

A. PLACE FRONT EDGE OF METER BOX 6" MAX BEHIND EXISTING OR PROPOSED 6' OR 8' SIDEWALKS.

B. WHEN PROPOSED OR EXISTING SIDEWALK IS 12' WIDE PLACE FRONT EDGE OF METER BOX 6" MAX BEHIND CURB USING APPROPRIATE METER BOX (SEE NOTE 10).

C. WHEN NO SIDEWALKS IS PROPOSED PLACE FRONT EDGE OF METER BOX 6.5' BEHIND CURB FACE.

D. WHEN NO CURBS ARE EXISTING OR TO BEING INSTALLED UPON COMPLETION OF THE WATER SYSTEM PLACE BACK EDGE OF METER BOX ON PROPERY LINE.

10 E. ADJOINING LOT METER BOXES SHALL BE PLACED TOGETHER AT PROPERTY LINE.

11 F. WHEN INSTALLED IN CONCRETE (SIDEWALK) USE EMWD APPROVED 17"x 30" METER BOX COMPLETE WITH COVER AND LID.

REVISIONS

NO.	DATE	INITIAL	DESCRIPTION	APP'D	DATE
14	7/21/17	GS	REVISED METER DATA TABLE METER LENGTHS	AGA	7/21/17
13	12/9/16	GS	REVISED NOTE 3, 6, AMD LOGO	AGA	12/12/16
12	5/15/15	GS	REVISED METER DATA TABLE	AGA	5/15/15
11	9/18/13	GS	REVISED NOTES, ADDED FLOW RATE TABLE, & REMOVED MAINLINE CONNECTION INFORMATION	AGA	10/23/14

REFERENCES: (SUPERCEDES B-341) ORIG DRAWN 3/85
FILE I.D.: \kauai\eng\std dwgs\B-591.dgn

SCALE: NONE
DRAWN BY: KER

APPROVALS

	INITIAL	DATE
DESIGN		
CONSTRUCTION		
INSPECTION		
OPERATIONS	ML	10/19/95
SUBMITTED	VJB	9/21/95

emwd EASTERN MUNICIPAL WATER DISTRICT

RECOMMENDED Joseph D. VanSickle 10/19/95
DIRECTOR OF ENGINEERING DATE

EASTERN MUNICIPAL WATER DISTRICT
STANDARD DRAWING

1" METER INSTALLATION 11

APPROVED G. Hooite Rugge 10/20/95
CHIEF ENGINEER DATE

B-591

14

1. PROVIDE AN USC APPROVED BACKFLOW PREVENTION ASSEMBLY AS DESIGNATED BY EMWD APPROVED MATERIALS LIST SPECIFICATIONS.

2. EMWD MAINTENANCE RESPONSIBILITY STOPS AT THE METER. THE CUSTOMER IS RESPONSIBLE TO TEST AND MAINTAIN THE BACKFLOW PREVENTION ASSEMBLY, IN ACCORDANCE WITH EMWD ORD. 69.

3. ONLY RIVERSIDE COUNTY CERTIFIED BACKFLOW TESTERS LISTED ON THE EMWD APPROVED BACKFLOW TESTER LIST ARE ALLOWED TO TEST BACKFLOW ASSEMBLIES WITHIN EMWD SERVICE AREA.

4. BACKFLOW CERTIFICATION TESTING IS REQUIRED ANNUALLY AT A MINIMUM BUT MAY BE MORE FREQUENT AS DEEMED NECESSARY BY EMWD. CERTIFICATION TESTING IS REQUIRED IMMEDIATELY AFTER AN ASSEMBLY IS RELOCATED, REPLACED, REPAIRED, NEW INSTALLATION ACCEPTANCE AND WATER DELIVERY PER EMWD ORD. 69 PRIOR TO NEW INSTALLATION ACCEPTANCE AND WATER DELIVERY.

5. BACKFLOW PREVENTION ASSEMBLY SIZE SHALL MATCH THE DIAMETER OF THE METER IN ACCORDANCE WITH THE UNIFORM PLUMBING CODE; CHAPTER 6, SECTION 610 AS AMENDED, PER TABLE "A", OR AS APPROVED BY EMWD. △1

6. BACKFLOW PREVENTION ASSEMBLY INSTALLATIONS INCLUDING ALL APPURTENACES FOR THE SUPPLY OF DOMESTIC WATER SHALL COMPLY WITH THE REQUIREMENTS OF THE CALIFORNIA LEAD-FREE ACT AB1953.

7. BACKFLOW PREVENTION ASSEMBLIES SHALL BE LOCATED AS CLOSE AS PRACTICAL TO THE WATER METER BOX BUT NOT FURTHER THAN 3 FEET UNLESS A VARIANCE IS OBTAINED FROM AN EMWD CROSS-CONNECTION SPECIALIST PRIOR TO INSTALLATION.

8. NO OUTLETS, TEES, OR CONNECTIONS SHALL BE ALLOWED BETWEEN THE METER AND THE BACKFLOW PREVENTION ASSEMBLY.

9. BACKFLOW PREVENTION ASSEMBLIES SHALL MAINTAIN A VERTICAL CLEARANCE FROM THE LOWEST POINT OF 12 INCHES (MINIMUM) TO 36 INCHES (MAXIMUM) ABOVE FINISHED GRADE, WITH SIDE AND TOP CLEARANCES OF 12 INCHES (MINIMUM) FROM ANY OBSTRUCTIONS IN ALL DIRECTIONS.

10. POLYETHYLENE ENCASEMENT SHALL BE INSTALLED PER ANSI/AWWA C105/A21.5 REQUIREMENTS. HIGH-DENSITY POLYETHYLENE (HDCLPE) SHALL BE A MINIMUM OF .004 (4 MIL) THICKNESS. LOW-DENSITY POLYETHYLENE (LLDPE) SHALL BE A MINIMUM OF .008 (8 MIL) THICKNESS.

RECOMMENDATIONS:

11. PARALLEL INSTALLATIONS OF THE SAME TYPE OF BACKFLOW PREVENTION ASSEMBLIES ARE STRONGLY RECOMMENDED FOR ALL FACILITIES REQUIRING UNINTERRUPTED WATER SUPPLY, SUCH AS, HOSPITALS AND SCHOOLS.

12. FREEZE PROTECTION IS RECOMMENDED, BUT THE RELIEF VALVE MUST BE ABLE TO VENT FREELY AND TESTCOCK OPENINGS SHALL BE LEFT EXPOSED.

13. THEFT PREVENTION DEVICES ARE STRONGLY RECOMMENDED FOR BRONZE ASSEMBLIES ALLOWING ADEQUATE ACCESS TO THE ASSEMBLY FOR TESTING, MAINTENANCE, AND PROPER DRAINAGE.

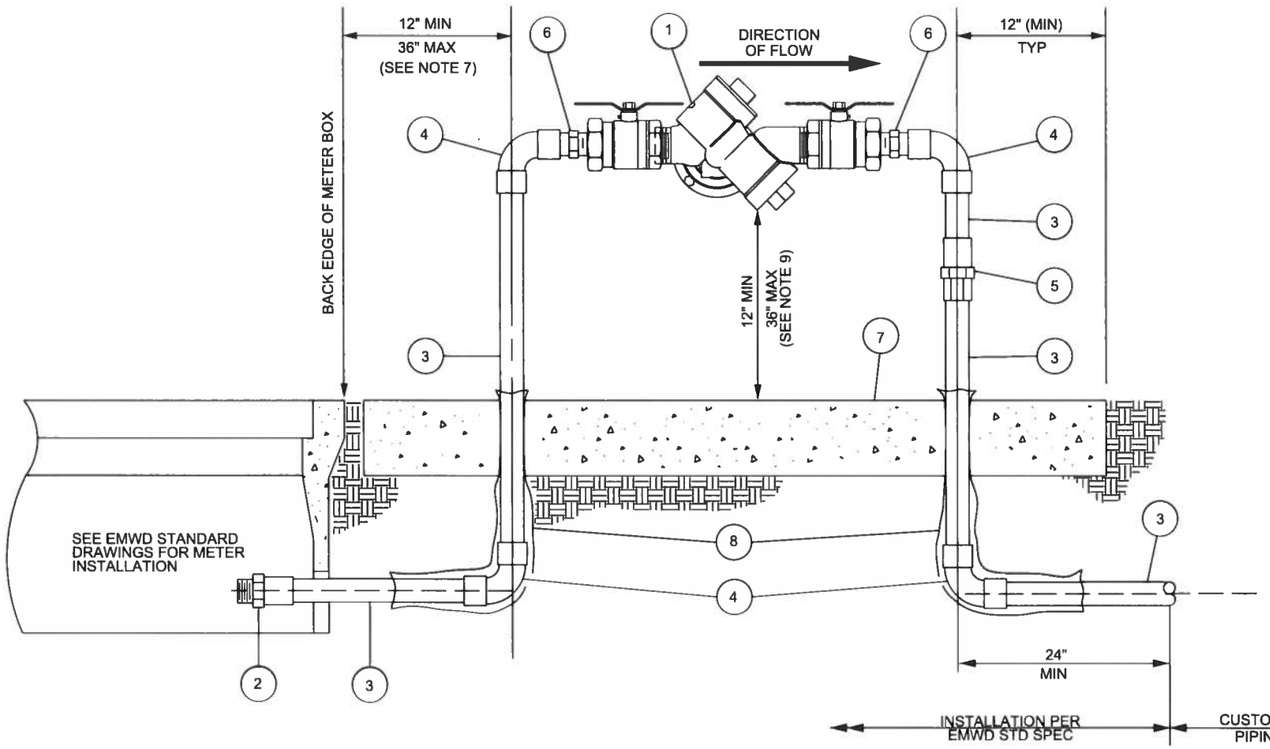

TABLE "A" △1

METER SIZE	BACKFLOW SIZE
⅝" MULTIJET (15 GPM)	¾"
¾" MULTIJET (20 GPM)	¾"
1" MULTIJET (30 GPM)	1"
1½" MULTIJET (75 GPM)	1½"
2" MULTIJET (120 GPM)	2"

ITEM	DESCRIPTION
1	3/4" THRU 2" REDUCED PRESSURE BACKFLOW PREVENTER WITH VALVES
2	COPPER ADAPTER, COPPER SOLDER JOINT x MALE IPT
3	COPPER WATER TUBE, TYPE L HARD OR BRASS
4	COPPER 90° ELBOW WITH COPPER SOLDER JOINTS
5	COPPER UNION WITH COPPER SOLDER JOINTS
6	COPPER ADAPTER, MALE SOLDER x MALE IPT
7	18" WIDE x 4" THICK CONCRETE PAD, LENGTH VARIES PER SIZE
8	POLYETHYLENE ENCASEMENT (SEE NOTE 10)

REVISIONS

NO.	DATE	INITIAL	DESCRIPTION	APP'D	DATE
△1	1-29-14	GS	REVISED NOTE #5 AND ADDED TABLE "A"	AGA	3/5/14

APPROVALS

	INITIAL	DATE
NEW BUSINESS	VJB	5/12/11
MAINTENANCE	MJ	5/23/11
INSPECTION	JCW	6/14/11
OPERATIONS	KG	5/18/11
SUBMITTED	SMM	5/12/11

EASTERN MUNICIPAL WATER DISTRICT

EASTERN MUNICIPAL WATER DISTRICT

STANDARD DRAWING

REDUCED PRESSURE BACKFLOW PREVENTER ASSY FOR SIZES 3/4" THROUGH 2"

REFERENCES:

FILE I.D.: \kauai\eng\stddrwgs\B-597A.dgn

SCALE: NONE

DRAWN BY GS

RECOMMENDED Joe Mouawad 6/21/11
DIRECTOR OF ENGINEERING DATE

APPROVED Charlie Bachmann 6/21/11
ASSISTANT GENERAL MANAGER DATE

B-597A △1

1. PROVIDE AN USC APPROVED BACKFLOW PREVENTION ASSEMBLY AS DESIGNATED BY EMWD APPROVED MATERIALS LIST SPECIFICATIONS.

2. EMWD MAINTENANCE RESPONSIBILITY STOPS AT THE METER. THE CUSTOMER IS RESPONSIBLE TO TEST AND MAINTAIN THE BACKFLOW PREVENTION ASSEMBLY, IN ACCORDANCE WITH EMWD ORD. 69.

3. ONLY RIVERSIDE COUNTY CERTIFIED BACKFLOW TESTERS LISTED ON THE EMWD APPROVED BACKFLOW TESTER LIST ARE ALLOWED TO TEST BACKFLOW ASSEMBLIES WITHIN EMWD SERVICE AREA.

4. BACKFLOW CERTIFICATION TESTING IS REQUIRED ANNUALLY AT A MINIMUM BUT MAY BE MORE FREQUENT AS DEEMED NECESSARY BY EMWD. CERTIFICATION TESTING IS REQUIRED IMMEDIATELY AFTER AN ASSEMBLY IS RELOCATED, REPLACED, REPAIRED, NEW INSTALLATION ACCEPTANCE AND WATER DELIVERY PER EMWD ORD. 69 PRIOR TO NEW INSTALLATION ACCEPTANCE AND WATER DELIVERY.

5. BACKFLOW PREVENTION ASSEMBLY SIZE SHALL MATCH THE DIAMETER OF THE METER IN ACCORDANCE WITH THE UNIFORM PLUMBING CODE; CHAPTER 6, SECTION 610 AS AMENDED, PER TABLE "A", OR AS APPROVED BY EMWD. ⚠1

6. BACKFLOW PREVENTION ASSEMBLY INSTALLATIONS INCLUDING ALL APPURTENACES FOR THE SUPPLY OF DOMESTIC WATER SHALL COMPLY WITH THE REQUIREMENTS OF THE CALIFORNIA LEAD-FREE ACT AB1953.

7. BACKFLOW PREVENTION ASSEMBLIES SHALL BE LOCATED AS CLOSE AS PRACTICAL TO THE WATER METER BOX BUT NOT FURTHER THAN 3 FEET UNLESS A VARIANCE IS OBTAINED FROM AN EMWD CROSS-CONNECTION SPECIALIST PRIOR TO INSTALLATION.

8. NO OUTLETS, TEES, OR CONNECTIONS SHALL BE ALLOWED BETWEEN THE METER AND THE BACKFLOW PREVENTION ASSEMBLY.

9. BACKFLOW PREVENTION ASSEMBLIES SHALL MAINTAIN A VERTICAL CLEARANCE FROM THE LOWEST POINT OF 12 INCHES (MINIMUM) TO 36 INCHES (MAXIMUM) ABOVE FINISHED GRADE, WITH SIDE AND TOP CLEARANCES OF 12 INCHES (MINIMUM) FROM ANY OBSTRUCTIONS IN ALL DIRECTIONS.

10. POLYETHYLENE ENCASEMENT SHALL BE INSTALLED PER ANSI/AWWA C105/A21.5 REQUIREMENTS. HIGH-DENSITY POLYETHYLENE (HDCLPE) SHALL BE A MINIMUM OF .004 (4 MIL) THICKNESS. LOW-DENSITY POLYETHYLENE (LLDPE) SHALL BE A MINIMUM OF .008 (8 MIL) THICKNESS.

RECOMMENDATIONS:

11. PARALLEL INSTALLATIONS OF THE SAME TYPE OF BACKFLOW PREVENTION ASSEMBLIES ARE STRONGLY RECOMMENDED FOR ALL FACILITIES REQUIRING UNINTERRUPTED WATER SUPPLY, SUCH AS, HOSPITALS AND SCHOOLS.

12. FREEZE PROTECTION IS RECOMMENDED, BUT THE RELIEF VALVE MUST BE able TO VENT FREELY AND TESTCOCK OPENINGS SHALL BE LEFT EXPOSED.

13. THEFT PREVENTION DEVICES ARE STRONGLY RECOMMENDED FOR BRONZE ASSEMBLIES ALLOWING ADEQUATE ACCESS TO THE ASSEMBLY FOR TESTING, MAINTENANCE, AND PROPER DRAINAGE.

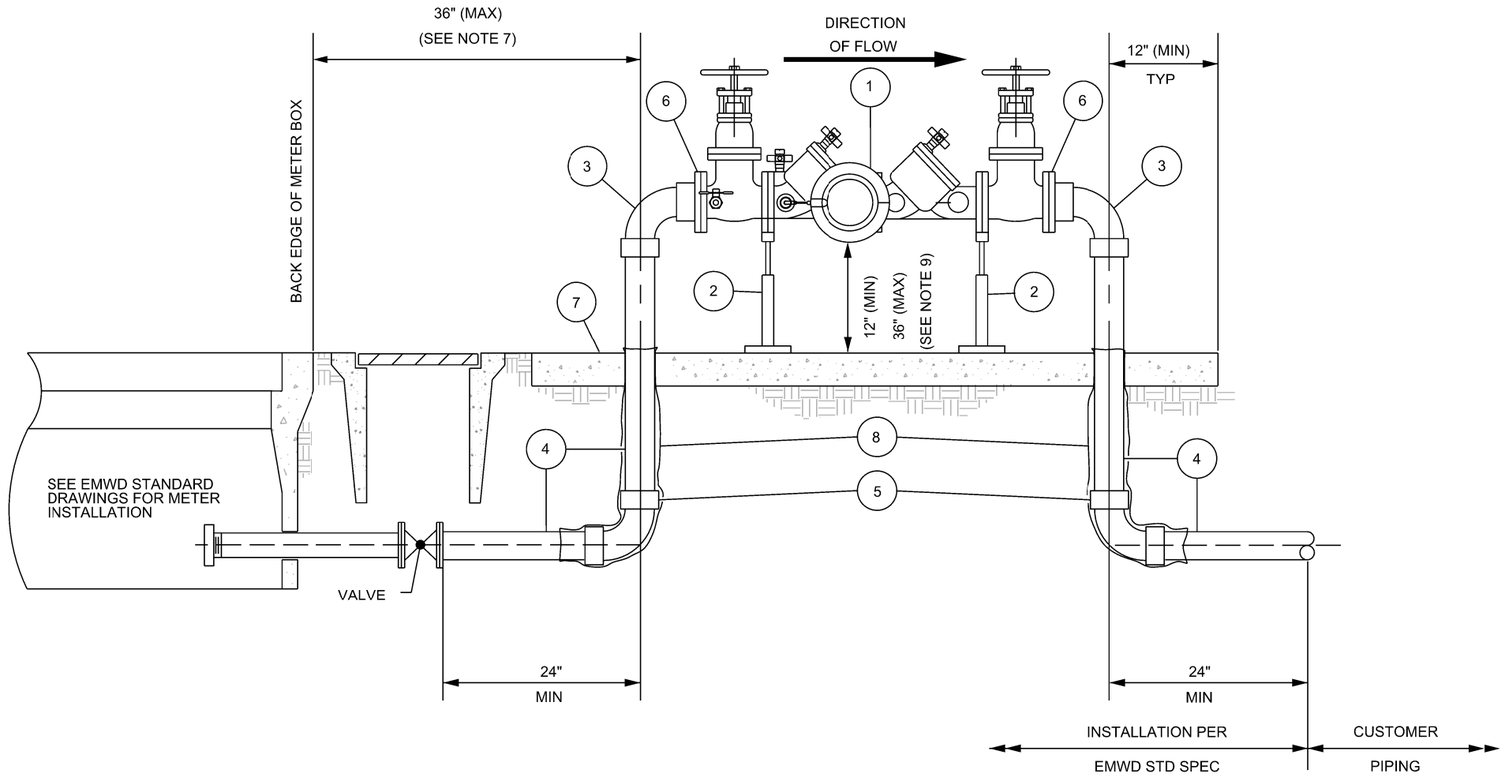

TABLE "A" ⚠1 ⚠2

METER SIZE	BACKFLOW SIZE
2" SENSUS C2 (160 GPM)	2½"
2" SENSUS T2 (200 GPM)	3"

ITEM	DESCRIPTION
1	2-1/2" AND 3" REDUCED PRESSURE BACKFLOW PREVENTER ASSEMBLY WITH VALVES
2	ADJUSTABLE PIPE SUPPORT
3	COPPER 90° ELBOW, CLOSE ROUGH, SLIP JT x SOLDER JT
4	COPPER WATER TUBE, TYPE L, HARD
5	COPPER 90° ELBOW, CLOSE ROUGH, SOLDER JOINTS
6	CL 150 CAST BRZ COMPANION FLANGE WITH THD SOLDER JOINT END
7	24" WIDE x 4" THICK CONCRETE PAD, LENGTH VARIES PER BACKFLOW SIZE
8	POLYETHYLENE ENCASEMENT (SEE NOTE 10)

REVISIONS

NO.	DATE	INITIAL	DESCRIPTION	APP'D	DATE
⚠2	12-30-15	GS	REVISED TABLE "A" METER TYPE AND DATA	AGA	12/30/15
⚠1	3-5-14	GS	REVISED NOTE #5 AND ADDED TABLE "A"	AGA	3/5/14

APPROVALS

	INITIAL	DATE
NEW BUSINESS	VJB	5/12/11
MAINTENANCE	MJ	5/23/11
INSPECTION	JCW	6/14/11
OPERATIONS	KG	5/18/11
SUBMITTED	SMM	5/12/11

EASTERN MUNICIPAL WATER DISTRICT

EASTERN MUNICIPAL WATER DISTRICT

EASTERN MUNICIPAL WATER DISTRICT
STANDARD DRAWING

REDUCED PRESSURE BACKFLOW PREVENTER ASSY FOR SIZES 2 1/2" THROUGH 3"

REFERENCES:

FILE I.D.: \kauai\eng\stddrwgs\B-597B.dgn

SCALE: NONE

DRAWN BY GS

RECOMMENDED Joe Mouawad 6/21/11
DIRECTOR OF ENGINEERING DATE

APPROVED Charlie Bachmann 6/21/11
ASSISTANT GENERAL MANAGER DATE

B-597B ⚠2

1. PROVIDE AN USC APPROVED BACKFLOW PREVENTION ASSEMBLY AS DESIGNATED BY EMWD APPROVED MATERIALS LIST SPECIFICATIONS.

2. EMWD MAINTENANCE RESPONSIBILITY STOPS AT THE METER. THE CUSTOMER IS MAINTAIN THE BACKFLOW PREVENTION ASSEMBLY, IN ACCORDANCE WITH EMWD ORD. 69. RESPONSIBLE TO TEST AND

3. ONLY RIVERSIDE COUNTY CERTIFIED BACKFLOW TESTERS LISTED ON THE EMWD APPROVED BACKFLOW TESTER LIST ARE ALLOWED TO TEST BACKFLOW ASSEMBLIES WITHIN EMWD SERVICE AREA.

4. BACKFLOW CERTIFICATION TESTING IS REQUIRED ANNUALLY AT A MINIMUM BUT MAY BE MORE FREQUENT AS DEEMED NECESSARY BY EMWD. CERTIFICATION TESTING IS REQUIRED IMMEDIATELY AFTER AN ASSEMBLY IS RELOCATED, REPLACED, REPAIRED, NEW INSTALLATION ACCEPTANCE AND WATER DELIVERY PER EMWD ORD. 69 PRIOR TO NEW INSTALLATION ACCEPTANCE AND WATER DELIVERY.

5. BACKFLOW PREVENTION ASSEMBLY SIZE SHALL MATCH THE DIAMETER OF THE METER IN ACCORDANCE WITH THE UNIFORM PLUMBING CODE; CHAPTER 6, SECTION 610 AS AMENDED, PER TABLE "A", OR AS APPROVED BY EMWD. (1)

6. BACKFLOW PREVENTION ASSEMBLY INSTALLATIONS INCLUDING ALL APPURTENACES FOR THE SUPPLY OF DOMESTIC WATER SHALL COMPLY WITH THE REQUIREMENTS OF THE CALIFORNIA LEAD-FREE ACT AB1953.

7. BACKFLOW PREVENTION ASSEMBLIES SHALL BE LOCATED AS CLOSE AS PRACTICAL TO THE WATER METER BOX BUT NOT FURTHER THAN 3 FEET UNLESS A VARIANCE IS OBTAINED FROM AN EMWD CROSS-CONNECTION SPECIALIST PRIOR TO INSTALLATION.

8. NO OUTLETS, TEES, OR CONNECTIONS SHALL BE ALLOWED BETWEEN THE METER AND THE BACKFLOW PREVENTION ASSEMBLY.

9. BACKFLOW PREVENTION ASSEMBLIES SHALL MAINTAIN A VERTICAL CLEARANCE FROM THE LOWEST POINT OF 12 INCHES (MINIMUM) TO 36 INCHES (MAXIMUM) ABOVE FINISHED GRADE, WITH SIDE AND TOP CLEARANCES OF 12 INCHES (MINIMUM) FROM ANY OBSTRUCTIONS IN ALL DIRECTIONS.

10. POLYETHYLENE ENCASEMENT SHALL BE INSTALLED PER ANSI/AWWA C105/A21.5 REQUIREMENTS. HIGH-DENSITY POLYETHYLENE (HDCLPE) SHALL BE A MINIMUM OF .004 (4 MIL) THICKNESS. LOW-DENSITY POLYETHYLENE (LLDPE) SHALL BE A MINIMUM OF .008 (8 MIL) THICKNESS.

RECOMMENDATIONS:

11. PARALLEL INSTALLATIONS OF THE SAME TYPE OF BACKFLOW PREVENTION ASSEMBLIES ARE STRONGLY RECOMMENDED FOR ALL FACILITIES REQUIRING UNINTERRUPTED WATER SUPPLY, SUCH AS, HOSPITALS AND SCHOOLS. WHEN THE METER CAPACITY EXCEEDS THE 10" BACKFLOW CAPACITY, PARALLEL BACKFLOWS SHALL BE INSTALLED. SEE MANIFOLD DETAIL.

12. FREEZE PROTECTION IS RECOMMENDED, BUT THE RELIEF VALVE MUST BE ABLE TO VENT FREELY AND TESTCOCK OPENINGS SHALL BE LEFT EXPOSED.

13. THEFT PREVENTION DEVICES ARE STRONGLY RECOMMENDED FOR BRONZE ASSEMBLIES ALLOWING ADEQUATE ACCESS TO THE ASSEMBLY FOR TESTING, MAINTENANCE, AND PROPER DRAINAGE.

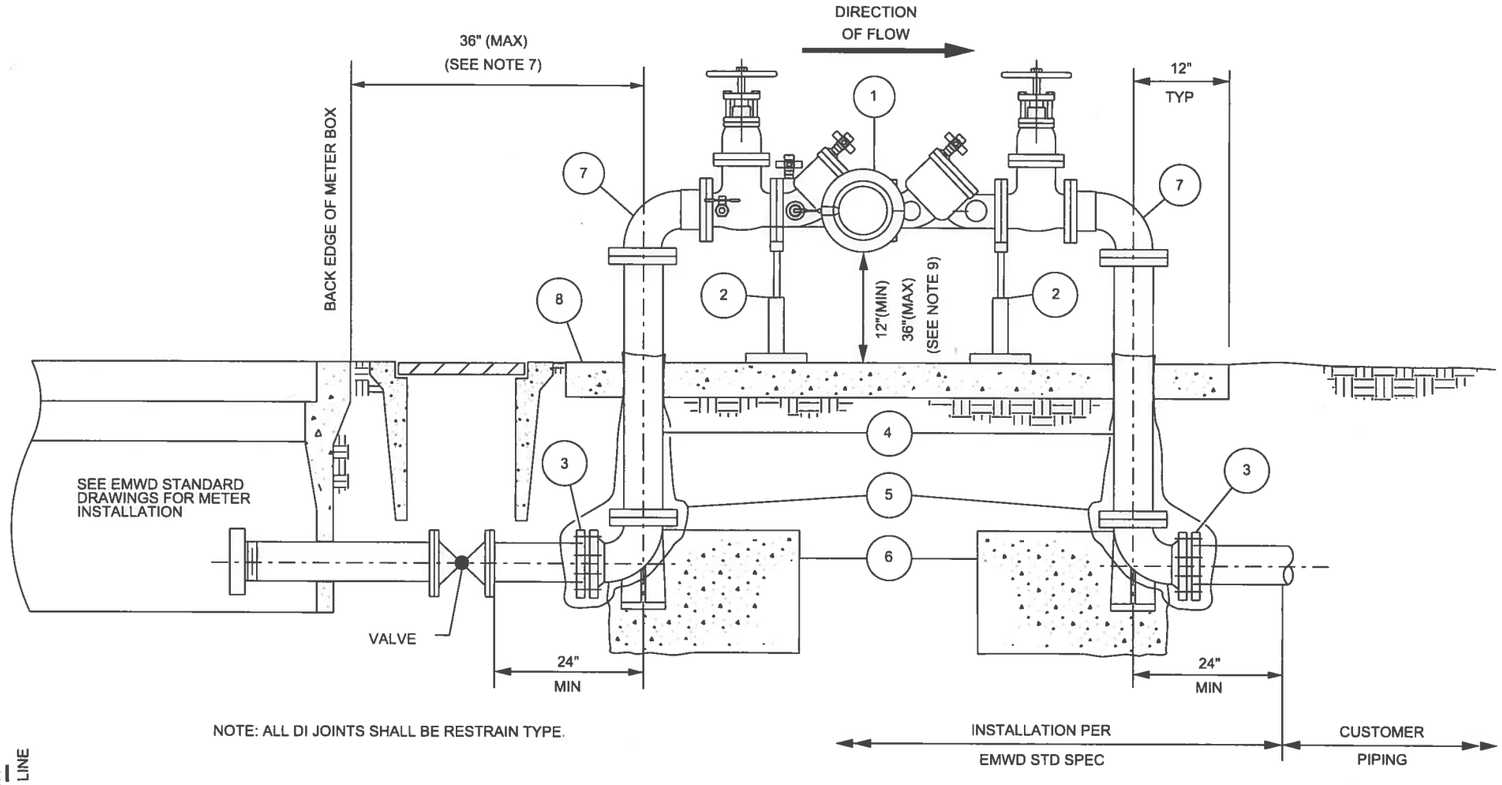

NOTE: ALL DI JOINTS SHALL BE RESTRAIN TYPE.

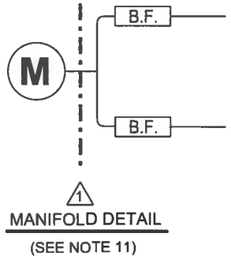

(1) MANIFOLD DETAIL
(SEE NOTE 11)

TABLE "A" (1)

METER SIZE	BACKFLOW SIZE
3" SENSUS C2 (400 GPM)	4"
3" SENSUS T2 (500 GPM)	4"
4" SENSUS C2 (800 GPM)	6"
4" SENSUS T2 (1,000 GPM)	6"
6" SENSUS C2 (1,600 GPM)	8"
6" SENSUS T2 (2,000 GPM)	10"

ITEM	DESCRIPTION
1	4" THRU 10" REDUCED PRESSURE BACKFLOW PREVENTER ASSEMBLY WITH VALVES
2	ADJUSTABLE PIPE SUPPORT
3	DI BASE BEND WITH CL 150 FLANGE X MECHANICAL JOINT
4	CLASS 53 DUCTILE IRON PIPE WITH CL 150 FLANGES
5	POLYETHYLENE ENCASEMENT PER ANSI/AWWA C105/A21.5 (SEE NOTE 10)
6	CONCRETE THRUST BLOCK PER B-407
7	DUCTILE IRON ¼ BEND WITH CL 150 FLANGES
8	36" WIDE X 4" THICK CONCRETE PAD. LENGTH VARIES PER BACKFLOW SIZE

REVISIONS

NO.	DATE	INITIAL	DESCRIPTION	APP'D	DATE
(1)	3-5-14	GS	REVISED NOTE #5, ADDED TABLE "A", AND MANIFOLD DETAIL	AGA	3/5/14

APPROVALS

	INITIAL	DATE
NEW BUSINESS	VJB	5/12/11
MAINTENANCE	MJ	5/23/11
INSPECTION	JEW	6/14/11
OPERATIONS	KG	5/18/11
SUBMITTED	SMM	5/12/11

EASTERN MUNICIPAL WATER DISTRICT

EASTERN MUNICIPAL WATER DISTRICT
STANDARD DRAWING

REDUCED PRESSURE BACKFLOW PREVENTER ASSY FOR SIZES 4" THROUGH 10"

REFERENCES:

FILE I.D.: \kauai\eng\stddrwgs\B-597C.dgn

SCALE: NONE

DRAWN BY GS

RECOMMENDED Joe Mouawad, DIRECTOR OF ENGINEERING, 6/21/11 DATE

APPROVED Charlie Bachmann, ASSISTANT GENERAL MANAGER, 6/21/11 DATE

B-597C (1)

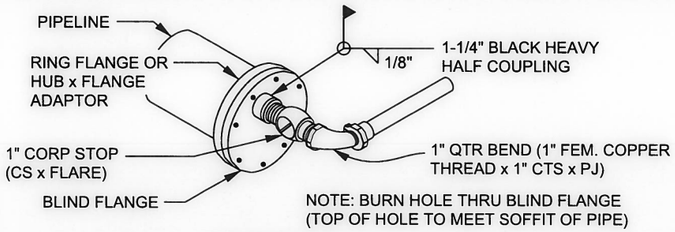

TYPE "D"
TEMPORARY END OF LINE

TYPE "C"
AC PIPE

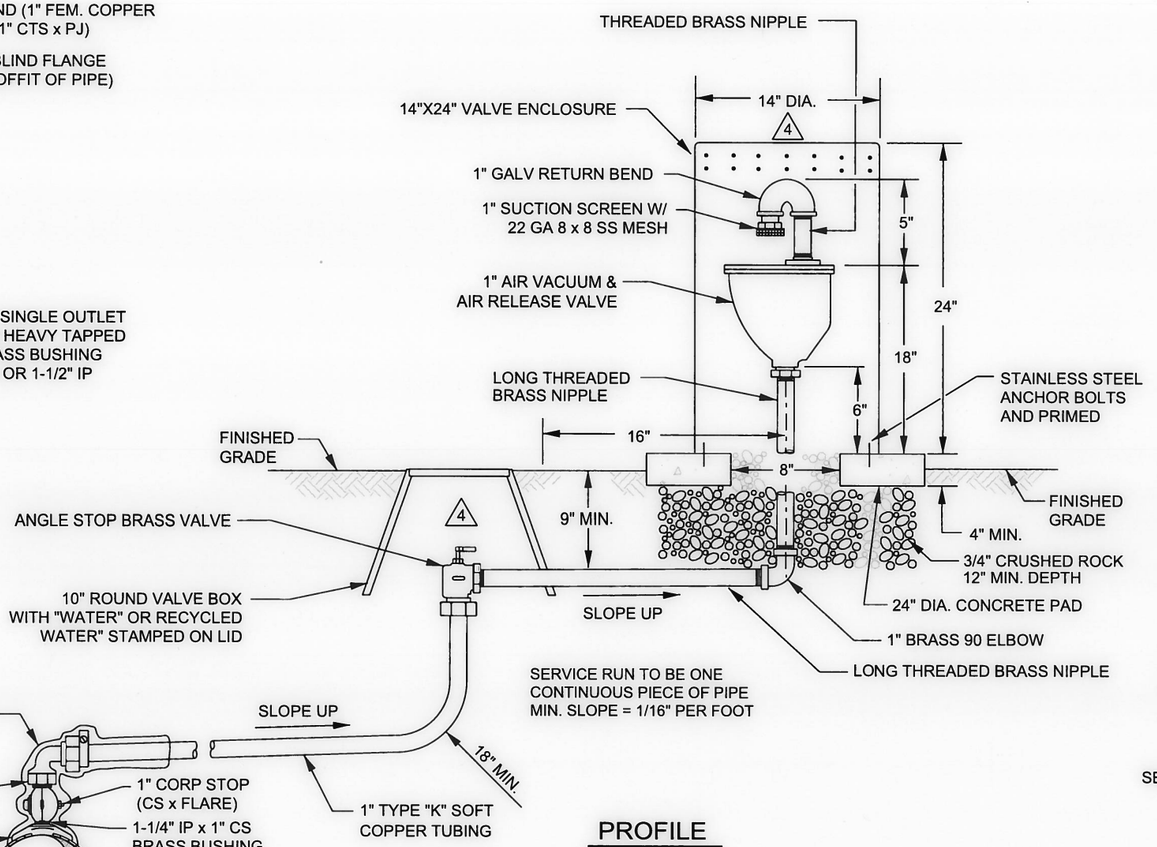

PROFILE

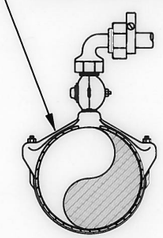

TYPE "B"
AC, DI, & PVC PIPE

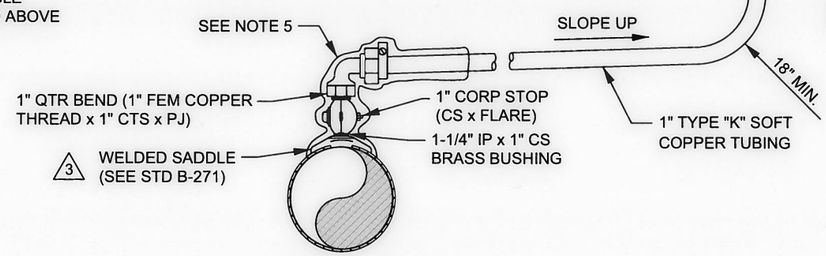

TYPE "A"
STEEL PIPE

NOTES:

1. ALL FITTINGS BETWEEN THE CORP. STOP AND AIR VALVE SHALL BE:
   A. MADE OF BRASS OR BRONZE;
   B. MADE OF THE BANDED PATTERN;
   C. DESIGNED FOR A MIN. OF 175 PSI (COLD) WATER WORKING PRESSURE
3. 2. PRESSURE TEST PER EMWD SPECIFICATIONS.
4. 3. ALL MATERIALS SHALL BE PER EMWD APPROVED MATERIAL LIST.
4. ALTERNATE MATERIALS MAY BE USED UPON APPROVAL BY THE ENGINEER.
5. CORPORATION STOP AND FITTINGS AT THE PIPELINE SHALL BE PRIMED AND WRAPPED WITH APPROVED COAL TAR RESIN TAPE.
6. ALL SERVICE PIPE AND TUBING SHALL BE LAID ON A CONSTANT SLOPE UP FROM THE WATER MAIN TO THE METER. NO DIPS OR POCKETS WILL BE PERMITTED.
7. THREAD NOTATION SHOWN THUS:
   IP = IRON PIPE THREAD;
   CS = CORPORATION STOP (MUELLER) THREAD;
   PJ = PACK JOINT.
4. 8. DOMESTIC WATER VALVE ENCLOSURE TO BE APPROVED COLOR TAN WITH A SINGLE COLOR STRIPE NEAR THE TOP; POTABLE-BLUE STENCIL "EMWD WATER," OR RECYCLED-PURPLE STENCIL "EMWD RECYCLED WATER".
9. PLACEMENT OF CONCRETE PAD:
   A. PLACE FRONT OF CONCRETE PAD 6" MAX BEHIND EXISTING OR PROPOSED 6' OR 8' SIDEWALKS.
   B. WHEN PROPOSED SIDEWALK IS 12' WIDE, PLACE FRONT EDGE OF PSD 6" BEHIND CURB.
   C. WHEN NO SIDEWALK IS PROPOSED, PLACE FRONT EDGE OF CONCRETE PAD 6.5' BEHIND CURB FACE.
   D. WHEN NO CURBS ARE EXISTING OR PROPOSED, PLACE BACK EDGE OF CONCRETE PAD ON PROPERTY LINE.
4. 10. ALL RSGV AND AV & AR RUBBER COMPONENTS SHALL BE EPDM.
4. 11. RECYCLED WATER AV & AR BODIES SHALL BE PAINTED PANTONE 522C.

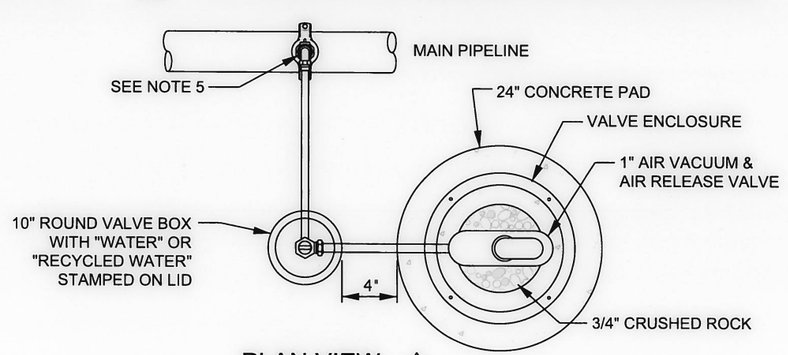

PLAN VIEW 4

REVISIONS

NO	DATE	INITIAL	DESCRIPTION	APP'D	DATE
4	7/11/13	GS	REVISED/ADDED NOTES, CONCRETE PAD, ROCK BEDDING, AND INCORPORATED ABOVE GRADE INSTALLATION W/ PLAN VIEW.	AGA	7/11/13
3	5/23/00	GR	REVISED NOTE 2 & DWG NO IN CALLOUT	VJB	5/24/00
2	4/10/97	KER	ADDED RISER DETAILS	VJB	4/23/95
1	7/15/95	KER	REDRAWN W/ CADD ON MYLAR	VJB	9/95

REFERENCES: INCORPORATES B-386
FILE I.D.: \kauai\eng\std dwgs\B-598.dgn
SCALE: NONE
DRAWN BY: SL

APPROVALS

	INITIAL	DATE
DESIGN		
CONSTRUCTION		
INSPECTION		
OPERATIONS	ML	10/9/95
SUBMITTED	VJB	9/21/95

RECOMMENDED Joseph D. VanSickle 10/19/95
DIRECTOR OF ENGINEERING DATE

EASTERN MUNICIPAL WATER DISTRICT

EASTERN MUNICIPAL WATER DISTRICT

EASTERN MUNICIPAL WATER DISTRICT
STANDARD DRAWING

1" AIR VALVE INSTALLATION

APPROVED G. Hoote Rugge 10/20/95
ASSISTANT GENERAL MANAGER DATE

B-598 4

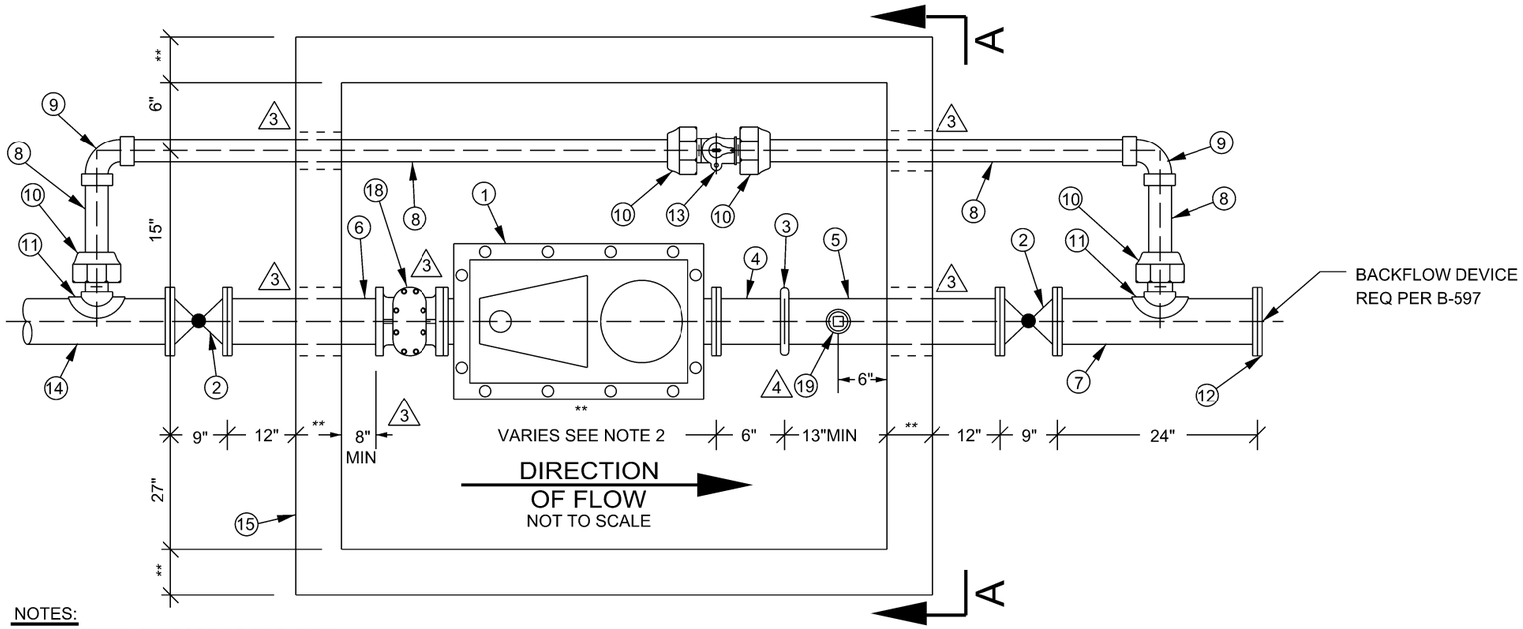

NOTES:

* 1. METER SUPPORT AS REQUIRED.

** 2. METER DIMENSIONS MAY VARY. CONTRACTOR SHALL VERIFY METER DIMS & SUPPLY UTILITY BOX WITH SPECIFIED CLEARANCE, WALL THICKNESS PER MANUFACTURER SPECIFICATION.

3. METER REGISTERS TO BE IN CUBIC FEET.

**** 4. BASE IS INCLUDED W/VAULT.

△4 5. READ HOLES ARE TO BE POSITIONED OVER METER REGISTERS AFTER METER IS INSTALLED PER B-976.

6. VAULT LIDS TO BE PRIMED & PAINTED EMWD APPROVED TAN.

7. ALL MATERIALS PER EMWD APPROVED MATERIAL LIST.

8. METER TYPE SHALL BE APPROVED BY NEW BUSINESS OR METER SERVICES.

9. DEPTH OF METER SHALL BE 5 FT. MAX. FROM VAULT LID TO TOP OF METER.

△3 10. PROVIDE A MAXIMUM 4" CLEARANCE BETWEEN PIPE AND KNOCKOUT HOLE WITH A MINIMUM OF 6" CLEARANCE ABOVE THE VAULT FLOOR.

△4 11. CONTRACTOR SHALL RETURN AFTER ROAD SHOULDER OR PARKWAY IS COMPLETE TO INSTALL METER BOX, AND SHALL BE RESPONSIBLE FOR COORDINATING WORK OF OTHER CONTRACTORS FOR SAFEGUARDING SERVICES UNTIL METER BOXES ARE SET.

△4 12. ALL BARE IRON AND STEEL SHALL BE COATED WITH CEMENT MORTAR AS PER THE FIELD ENGINEER.

△4 13. VALVES AND OTHER APPURTENANCES AND FITTINGS AT THE PIPELINE SHALL BE PRIMED AND WRAPPED WITH PROTECTO-WRAP NO. 200 OR 300 TAR RESIN TAPE. BOLTS AND NUTS SHALL BE PROTECTED USING ZINC CAPS ANODES IN ACCORDANCE WITH SECTION 15089.

△4 14. RISER AND CAP SHALL BE INSTALLED PER B-668.

△4 15. TEST PORT (COUPLING & PLUG) SHALL BE 2" (IP).

△4 16. SYSTEMS WITH ONSITE PUMPS SHALL NOT EXCEED 5 FPS VELOCITY WITHIN THE SERVICE LATERAL. SYSTEMS WITHOUT PUMPS, SHALL NOT EXCEED 10 FPS.

△4 17. UPON EMWD APPROVAL, VAULT DEPTHS GREATER THAN 5 FT SHALL INSTALL LADDER PER B-519 OR B-520. ("DANGER" PERMITTED CONFINED SPACE DO NOT ENTER) SHALL BE PAINTED ON THE VAULT LID PER EMWD SPECIFICATIONS.

MATERIALS LIST △4

ITEM	QTY	DESCRIPTION
1	1	3" METER *
2	2	4" OR 6" RESILIENT SEAT GATE VALVE FxF
3	1	4" OR 6" VICTAULIC COUPLING
4	1	4"X6" OR 6"X6" FLG x VICTAULIC NIPPLE
5	1	4" OR 6" FLG x VICTAULIC NIPPLE (LENGTH VARIES)
6	1	4" OR 6" F x F SPOOL (LENGTH VARIES)
7	1	4"X24" OR 6"X24" FLANGED SPOOL
8	15'+/-	15'+/-2" COPPER TUBING TYPE K
9	2	2"x90 DEG COPPER SWEAT ELL
10	4	2" COPPER SWxIPM ADAPTER, (CORP STOP W/PVC)
11	2	2-1/2"x4" SERVICE SADDLE W/2-1/2"x2"BRASS RED BUSHING, (2" SERVICE CLAMP W/PVC)
12	1	BLIND FLANGE (IF REQUIRED)
13	1	2" BRASS CURB STOP
14	LF	4" OR 6" PIPE
15	1	UTILITY BOX/VAULT **
16	1	TORSION SPRING 2-PC LID : △1 PARKWAY OR TRAFFIC COVER (ALUMINUM), ROADWAY APPLIC. TO MEET AASHTO H-20 DIRECT TRAFFIC RATING (STEEL). △2
17	1	PRECAST CONCRETE BASE W/8" SUMP ****
△3 18	1	WATER METER STRAINER
△4 19	1	(IP) COUPLING AND PLUG (SEE NOTE 15)

△4 NOTE: ALL MATERIALS SHALL MATCH THE SERVICE LATERAL PIPELINE SIZE EXCLUDING BYPASS LINE.

FLOW RATE TABLE △4

FUTURE METER SIZE	FLOW RATE (GPM)	LATERAL SIZE	VELOCITY (FT/S)	METER LENGTH
3" OMNI C2	400	4"	8.4	17"
3" OMNI T2	500	4"	10.6	19"
3" OMNI C2	400	6"	4.1	17"
3" OMNI T2	500	6"	5.1	19"

VIEW A-A

NOT TO SCALE

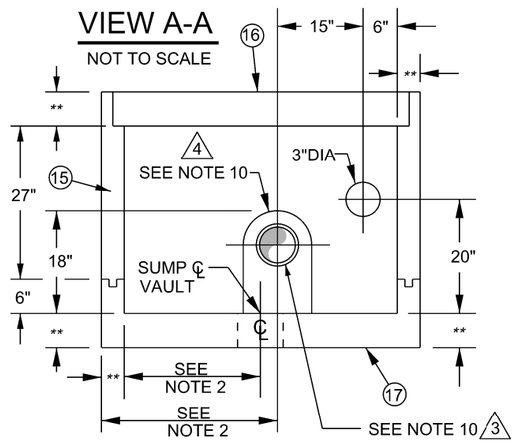

REVISIONS

NO	DATE	INITIAL	DESCRIPTION	APP'D	DATE
△4	5/15/15	GS	ADDED FLOW RATE TABLE, TEST PORT, B-976 REFERENCE TO NOTE 5, MATERIAL LIST, AND NOTES 11, 12, 13, 14, 15, & 16.	AGA	5/15/15
△3	10/26/06	RE	ADDED NOTE # 10 & MATERIAL LIST # 18 WATER STRAINER & KNOCKOUT HOLE LOCATIONS	JM	11/2/06
△2	2/23/04	CM	ADDED ASSHTO RATED	VB	2/24/04

REFERENCES:

FILE I.D.: \kauai\eng\std dwgs\b633.dgn

SCALE: NONE

DRAWN BY: SKD

APPROVALS

	INITIAL	DATE
DESIGN	JVS	12/9/85
CONSTRUCTION	JDA	
INSPECTION		
OPERATIONS	DWH	
SUBMITTED	LM	2/10/86

EASTERN MUNICIPAL WATER DISTRICT

EASTERN MUNICIPAL WATER DISTRICT

EASTERN MUNICIPAL WATER DISTRICT
STANDARD DRAWING

3" METER INSTALLATION

APPROVED James H. Bunts, Jr 2/12/86 DATE

B-633 △4

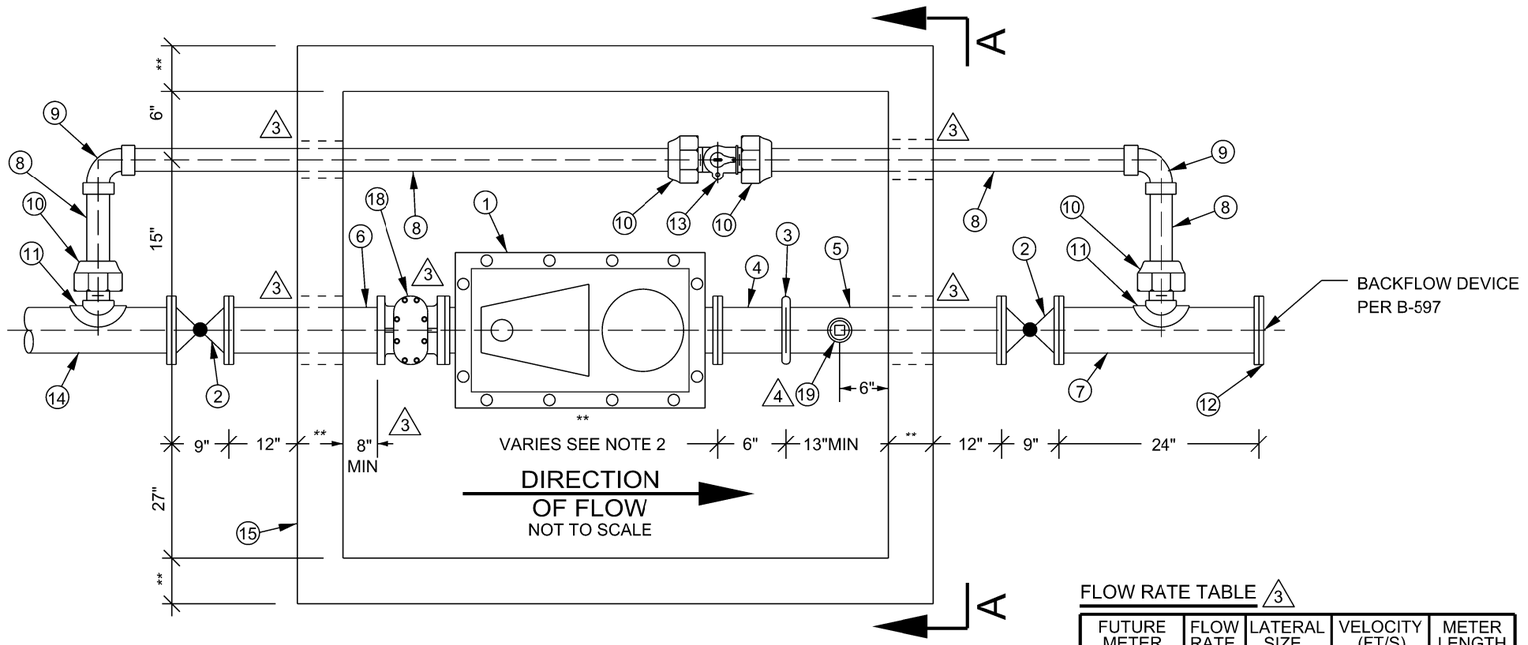

NOTES:

* 1. METER SUPPORT AS REQUIRED.

** 2. METER DIMENSIONS MAY VARY. CONTRACTOR SHALL VERIFY METER DIMS & SUPPLY UTILITY BOX WITH SPECIFIED CLEARANCE, WALL THICKNESS PER MANUFACTURER SPECIFICATION.

3. METER REGISTERS TO BE IN CUBIC FEET.

**** 4. BASE IS INCLUDED W/VAULT.

△3 5. READ HOLES ARE TO BE POSITIONED OVER METER REGISTERS AFTER METER IS INSTALLED PER B-976.

6. VAULT LIDS TO BE PRIMED & PAINTED EMWD APPROVED TAN.

7. ALL MATERIALS PER EMWD APPROVED MATERIAL LIST.

8. METER TYPE SHALL BE APPROVED BY NEW BUSINESS OR METER SERVICES.

9. DEPTH OF METER SHALL BE 5 FT. MAX. FROM VAULT LID TO TOP OF METER.

△2 10. PROVIDE A MAXIMUM 4" CLEARANCE BETWEEN PIPE AND KNOCKOUT HOLE WITH A MINIMUM OF 6" CLEARANCE ABOVE THE VAULT FLOOR.

△3 11. CONTRACTOR SHALL RETURN AFTER ROAD SHOULDER OR PARKWAY IS COMPLETE TO INSTALL METER VAULT, AND SHALL BE RESPONSIBLE FOR COORDINATING WORK OF OTHER CONTRACTORS FOR SAFEGUARDING SERVICES UNTIL METER VAULT IS SET.

△3 12. ALL BARE IRON AND STEEL SHALL BE COATED WITH CEMENT MORTAR AS PER THE FIELD ENGINEER.

△3 13. VALVES AND OTHER APPURTENANCES AND FITTINGS AT THE PIPELINE SHALL BE PRIMED AND WRAPPED WITH PROTECTO-WRAP NO. 200 OR 300 TAR RESIN TAPE. BOLTS AND NUTS SHALL BE PROTECTED USING ZINC CAPS ANODES IN ACCORDANCE WITH SECTION 15089.

△3 14. RISER AND CAP SHALL BE INSTALLED PER B-668.

△3 15. TEST PORT (COUPLING & PLUG) SHALL BE 2" (IP).

△3 16. SYSTEMS WITH ONSITE PUMPS SHALL NOT EXCEED 5 FPS VELOCITY WITHIN THE SERVICE LATERAL. SYSTEMS WITHOUT PUMPS, SHALL NOT EXCEED 10 FPS.

△3 17. UPON EMWD APPROVAL, VAULT DEPTHS GREATER THAN 5 FT SHALL INSTALL LADDER PER B-519 OR B-520. ("DANGER" PERMITTED CONFINED SPACE DO NOT ENTER) SHALL BE PAINTED ON THE VAULT LID PER EMWD SPECIFICATIONS.

FLOW RATE TABLE △3

FUTURE METER SIZE	FLOW RATE (GPM)	LATERAL SIZE	VELOCITY (FT/S)	METER LENGTH
4" OMNI C2	800	6"	8.2	20"
4" OMNI T2	1000	6"	10.2	23"
4" OMNI C2	800	8"	4.8	20"
4" OMNI T2	1000	8"	5.9	23"

MATERIALS LIST △3

ITEM	QTY	DESCRIPTION
1	1	4" METER *
2	2	6" OR 8" RESILIENT SEAT GATE VALVE FxF
3	1	6" OR 8" VICTAULIC COUPLING
4	1	8"X6" OR 12"X6" FLG x VICTAULIC NIPPLE
5	1	8" OR 12" FLG x VICTAULIC NIPPLE (LENGTH VARIES)
6	1	8" OR 12" F x F SPOOL (LENGTH VARIES)
7	1	6"X24" OR 8"X24" FLANGED SPOOL
8	15'+/-	15'+/-2" COPPER TUBING TYPE K
9	2	2"x90 DEG COPPER SWEAT ELL
10	4	2" COPPER SWxIPM ADAPTER, (CORP STOP W/PVC)
11	2	2-1/2"x4" SERVICE SADDLE W/2-1/2"x2"BRASS RED BUSHING, (2" SERVICE CLAMP W/PVC)
12	1	BLIND FLANGE (IF REQUIRED)
13	1	2" BRASS CURB STOP
14	LF	6" OR 8" PIPE
15	1	UTILITY BOX/VAULT **
16	1	TORSION SPRING 2-PC LID : △1 PARKWAY OR TRAFFIC COVER (ALUMINUM), ROADWAY APPLIC. TO MEET AASHTO H-20 DIRECT TRAFFIC RATING (STEEL).
17	1	PRECAST CONCRETE BASE W/8" SUMP ****
△2 18	1	WATER METER STRAINER
△3 19	1	(IP) COUPLING AND PLUG (SEE NOTE 15)

△3 NOTE: ALL MATERIALS SHALL MATCH THE SERVICE LATERAL PIPELINE SIZE EXCLUDING BYPASS LINE.

VIEW A-A
NOT TO SCALE

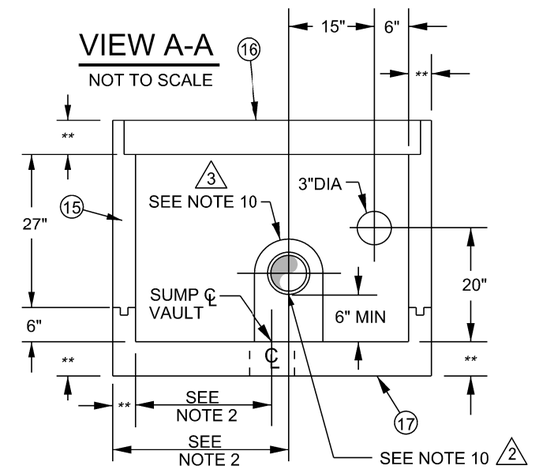

REVISIONS

NO.	DATE	INITIAL	DESCRIPTION	APP'D	DATE
△3	6/19/15	GS	ADDED FLOW RATE TABLE, TEST PORT, B-976 REFERENCE TO NOTE 5, MATERIAL LIST, AND NOTES 11, 12, 13, 14, 15, & 16.	AGA	6/19/15
△2	10/9/06	RE	ADDED NOTE # 10 & MATERIAL LIST # 18 WATER STRAINER & KNOCKOUT HOLE LOCATIONS	JM	10/17/06

APPROVALS

	INITIAL	DATE
DESIGN	JVS	12/9/85
CONSTRUCTION	JDA	
INSPECTION		
OPERATIONS	DWH	
SUBMITTED	LM	2/10/86

EASTERN MUNICIPAL WATER DISTRICT

EASTERN MUNICIPAL WATER DISTRICT

EASTERN MUNICIPAL WATER DISTRICT
STANDARD DRAWING

4" METER INSTALLATION

REFERENCES: REPLACES B-492

FILE I.D.: \kauai\eng\std dwgs\B-633.dgn

SCALE: NONE

DRAWN BY: SKD

APPROVED James H. Bunts, Jr 2/12/86
DATE

B-634 △3

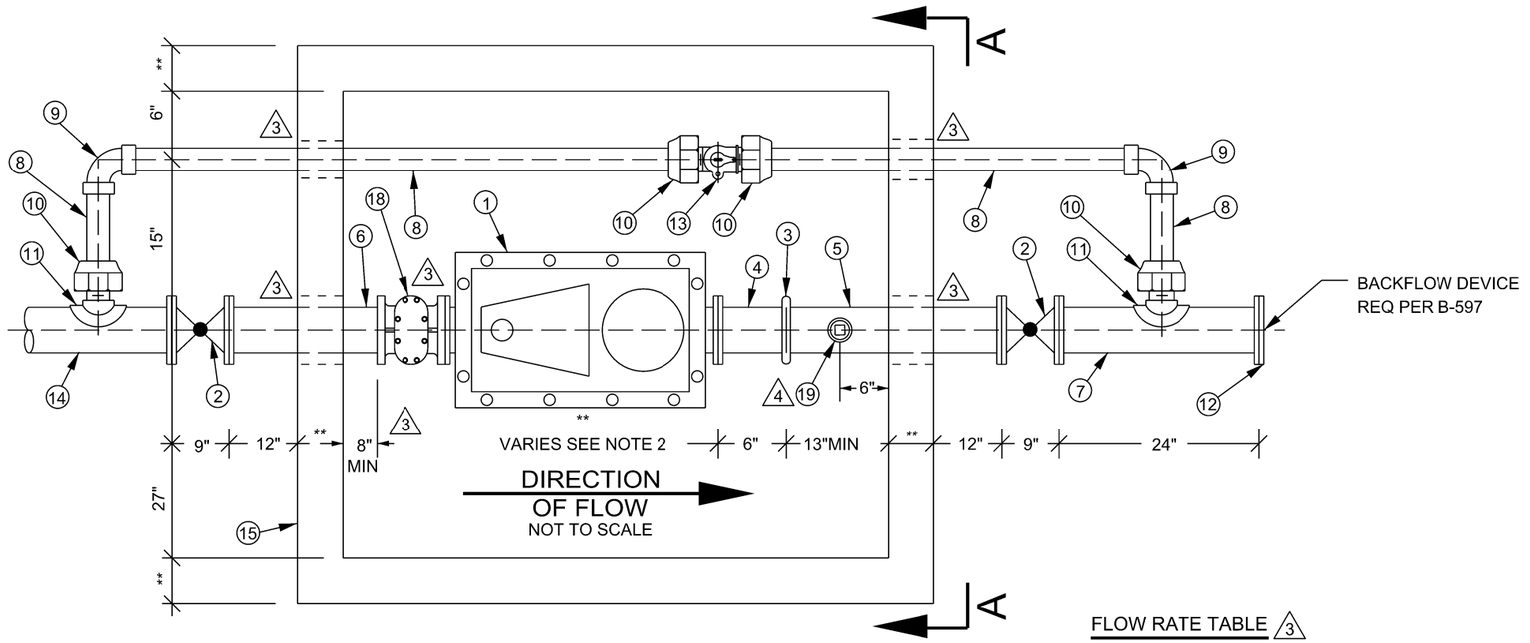

MATERIALS LIST △3

ITEM	QTY	DESCRIPTION
1	1	6" METER *
2	2	8" OR 12" RESILIENT SEAT GATE VALVE FxF
3	1	8" OR 12" VICTAULIC COUPLING
4	1	8"X6" OR 12"X6" FLG x VICTAULIC NIPPLE
5	1	8" OR 12" FLG x VICTAULIC NIPPLE (LENGTH VARIES)
6	1	8" OR 12" F x F SPOOL (LENGTH VARIES)
7	1	8"X24" OR 12"X24" FLANGED SPOOL
8	15'+/-	15'+/-2" COPPER TUBING TYPE K
9	2	2"x90 DEG COPPER SWEAT ELL
10	4	2" COPPER SWxIPM ADAPTER, (CORP STOP W/PVC)
11	2	2-1/2"x4" SERVICE SADDLE W/2-1/2"x2"BRASS RED BUSHING, (2" SERVICE CLAMP W/PVC)
12	1	BLIND FLANGE (IF REQUIRED)
13	1	2" BRASS CURB STOP
14		8" OR 12" PIPE
15	1	UTILITY BOX/VAULT **
16	1	TORSION SPRING 2-PC LID : △1 PARKWAY OR TRAFFIC COVER (ALUMINUM), ROADWAY APPLIC. TO MEET AASHTO H-20 DIRECT TRAFFIC RATING (STEEL).
17	1	PRECAST CONCRETE BASE W/8" SUMP ****
△2 18	1	WATER METER STRAINER
△3 19	1	(IP) COUPLING AND PLUG (SEE NOTE 15)

△3 NOTE: ALL MATERIALS SHALL MATCH THE SERVICE LATERAL PIPELINE SIZE EXCLUDING BYPASS LINE.

FLOW RATE TABLE △3

FUTURE METER SIZE	FLOW RATE (GPM)	LATERAL SIZE	VELOCITY (FT/S)	METER LENGTH
6" OMNI C2	1600	8"	9.5	24"
6" OMNI C2	1600	12"	4.5	24"
6" OMNI T2	2000	12"	5.6	27"

VIEW A-A

NOT TO SCALE

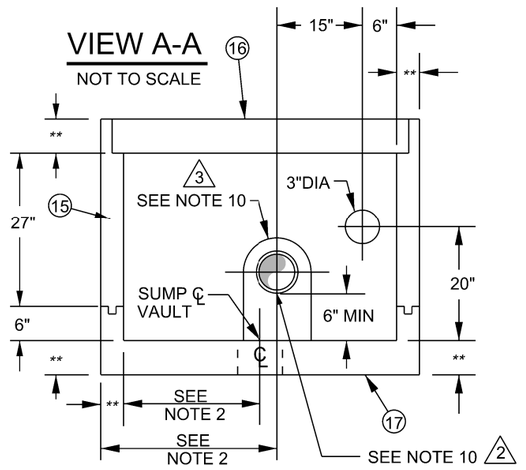

NOTES:

* 1. METER SUPPORT AS REQUIRED.

** 2. METER DIMENSIONS MAY VARY. CONTRACTOR SHALL VERIFY METER DIMS & SUPPLY UTILITY BOX WITH SPECIFIED CLEARANCE, WALL THICKNESS PER MANUFACTURER SPECIFICATION.

3. METER REGISTERS TO BE IN CUBIC FEET.

**** 4. BASE IS INCLUDED W/VAULT.

△3 5. READ HOLES ARE TO BE POSITIONED OVER METER REGISTERS AFTER METER IS INSTALLED PER B-976.

6. VAULT LIDS TO BE PRIMED & PAINTED EMWD APPROVED TAN.

7. ALL MATERIALS PER EMWD APPROVED MATERIAL LIST.

8. METER TYPE SHALL BE APPROVED BY NEW BUSINESS OR METER SERVICES.

9. DEPTH OF METER SHALL BE 5 FT. MAX. FROM VAULT LID TO TOP OF METER.

△2 10. PROVIDE A MAXIMUM 4" CLEARANCE BETWEEN PIPE AND KNOCKOUT HOLE WITH A MINIMUM OF 6" CLEARANCE ABOVE THE VAULT FLOOR.

△3 11. CONTRACTOR SHALL RETURN AFTER ROAD SHOULDER OR PARKWAY IS COMPLETE TO INSTALL METER VAULT, AND SHALL BE RESPONSIBLE FOR COORDINATING WORK OF OTHER CONTRACTORS FOR SAFEGUARDING SERVICES UNTIL METER VAULT IS SET.

△3 12. ALL BARE IRON AND STEEL SHALL BE COATED WITH CEMENT MORTAR AS PER THE FIELD ENGINEER.

△3 13. VALVES AND OTHER APPURTENANCES AND FITTINGS AT THE PIPELINE SHALL BE PRIMED AND WRAPPED WITH PROTECTO-WRAP NO. 200 OR 300 TAR RESIN TAPE. BOLTS AND NUTS SHALL BE PROTECTED USING ZINC CAPS ANODES IN ACCORDANCE WITH SECTION 15089.

△3 14. RISER AND CAP SHALL BE INSTALLED PER B-668.

△3 15. TEST PORT (COUPLING & PLUG) SHALL BE 2" (IP).

△3 16. SYSTEMS WITH ONSITE PUMPS SHALL NOT EXCEED 5 FPS VELOCITY WITHIN THE SERVICE LATERAL. SYSTEMS WITHOUT PUMPS, SHALL NOT EXCEED 10 FPS.

△3 17. UPON EMWD APPROVAL, VAULT DEPTHS GREATER THAN 5 FT SHALL INSTALL LADDER PER B-519 OR B-520. ("DANGER" PERMITTED CONFINED SPACE DO NOT ENTER) SHALL BE PAINTED ON THE VAULT LID PER EMWD SPECIFICATIONS.

REVISIONS

NO.	DATE	INITIAL	DESCRIPTION	APP'D	DATE
△3	6/19/15	GS	ADDED FLOW RATE TABLE, TEST PORT, B-976 REFERENCE TO NOTE 5, MATERIAL LIST, AND NOTES 11, 12, 13, 14, 15, & 16.	AGA	6/19/15
△2	10/30/06	RE	ADDED NOTE # 10 & MATERIAL LIST # 18 WATER STRAINER & KNOCKOUT HOLE LOCATIONS	JM	11/2/06

APPROVALS

	INITIAL	DATE
DESIGN	JVS	12/9/85
CONSTRUCTION	JDA	
INSPECTION		
OPERATIONS	DWH	
SUBMITTED	LM	2/10/86

EASTERN MUNICIPAL WATER DISTRICT

EASTERN MUNICIPAL WATER DISTRICT

EASTERN MUNICIPAL WATER DISTRICT
STANDARD DRAWING

6" METER INSTALLATION

REFERENCES:

FILE I.D.: \kauai\eng\std dwgs\B-635.dgn

SCALE: NONE

DRAWN BY: SKD

APPROVED James H. Bunts, Jr 2/12/86
DATE

B-635 △3

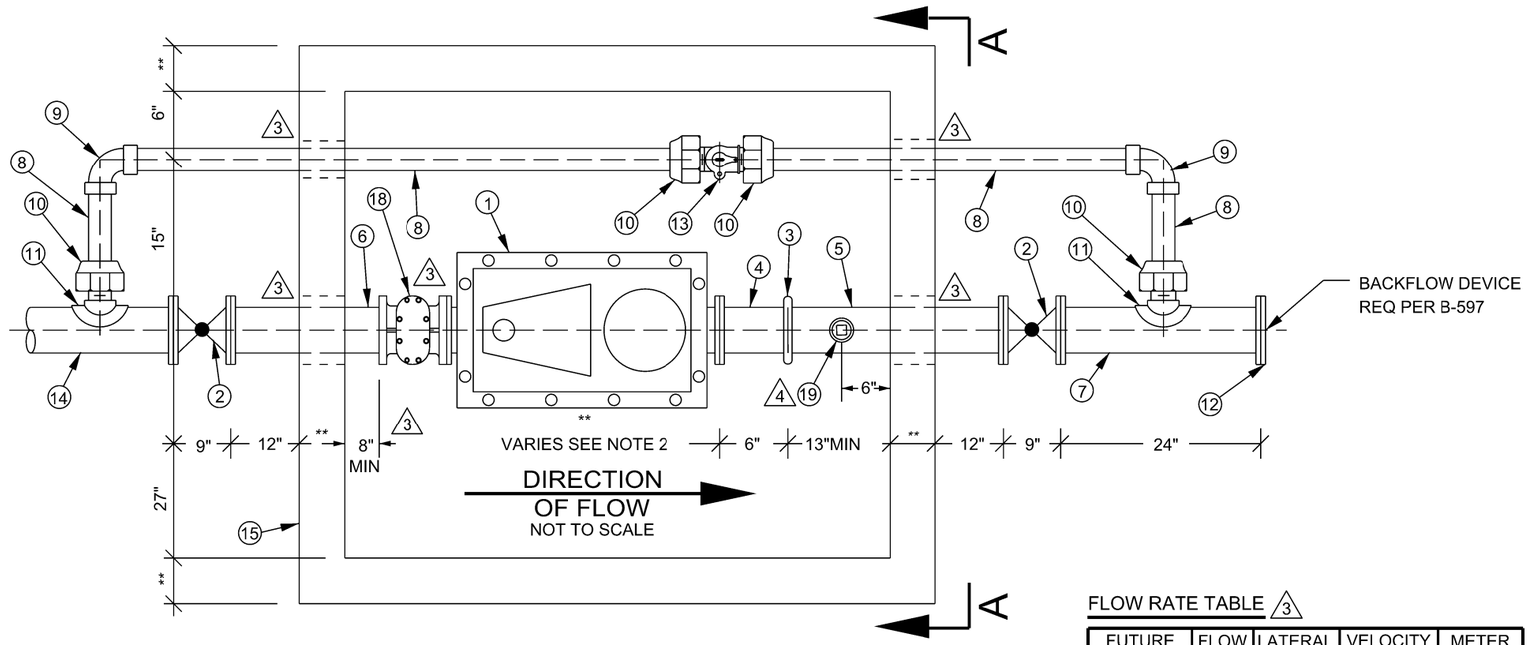

NOTES:

* 1. METER SUPPORT AS REQUIRED.

** 2. METER DIMENSIONS MAY VARY. CONTRACTOR SHALL VERIFY METER DIMS & SUPPLY UTILITY BOX WITH SPECIFIED CLEARANCE, WALL THICKNESS PER MANUFACTURER SPECIFICATION.

3. METER REGISTERS TO BE IN CUBIC FEET.

**** 4. BASE IS INCLUDED W/VAULT.

△3 5. READ HOLES ARE TO BE POSITIONED OVER METER REGISTERS AFTER METER IS INSTALLED PER B-976.

6. VAULT LIDS TO BE PRIMED & PAINTED EMWD APPROVED TAN.

7. ALL MATERIALS PER EMWD APPROVED MATERIAL LIST.

8. METER TYPE SHALL BE APPROVED BY NEW BUSINESS OR METER SERVICES.

9. DEPTH OF METER SHALL BE 5 FT. MAX. FROM VAULT LID TO TOP OF METER.

△2 10. PROVIDE A MAXIMUM 4" CLEARANCE BETWEEN PIPE AND KNOCKOUT HOLE WITH A MINIMUM OF 6" CLEARANCE ABOVE THE VAULT FLOOR.

△3 11. CONTRACTOR SHALL RETURN AFTER ROAD SHOULDER OR PARKWAY IS COMPLETE TO INSTALL METER VAULT, AND SHALL BE RESPONSIBLE FOR COORDINATING WORK OF OTHER CONTRACTORS FOR SAFEGUARDING SERVICES UNTIL METER VAULT IS SET.

△3 12. ALL BARE IRON AND STEEL SHALL BE COATED WITH CEMENT MORTAR AS PER THE FIELD ENGINEER.

△3 13. VALVES AND OTHER APPURTENANCES AND FITTINGS AT THE PIPELINE SHALL BE PRIMED AND WRAPPED WITH PROTECTO-WRAP NO. 200 OR 300 TAR RESIN TAPE. BOLTS AND NUTS SHALL BE PROTECTED USING ZINC CAPS ANODES IN ACCORDANCE WITH SECTION 15089.

△3 14. RISER AND CAP SHALL BE INSTALLED PER B-668.

△3 15. TEST PORT (COUPLING & PLUG) SHALL BE 4" (IP).

△3 16. SYSTEMS WITH ONSITE PUMPS SHALL NOT EXCEED 5 FPS VELOCITY WITHIN THE SERVICE LATERAL. SYSTEMS WITHOUT PUMPS, SHALL NOT EXCEED 10 FPS.

△3 17. UPON EMWD APPROVAL, VAULT DEPTHS GREATER THAN 5 FT SHALL INSTALL LADDER PER B-519 OR B-520. ("DANGER" PERMITTED CONFINED SPACE DO NOT ENTER) SHALL BE PAINTED ON THE VAULT LID PER EMWD SPECIFICATIONS.

FLOW RATE TABLE △3

FUTURE METER SIZE	FLOW RATE (GPM)	LATERAL SIZE	VELOCITY (FT/S)	METER LENGTH
8" OMNI C2	2700	12"	7.5	30⅛"
8" OMNI T2	3500	12"	9.8	30⅛"
8" OMNI C2	2700	18"	3.4	30⅛"
8" OMNI T2	3500	18"	4.4	30⅛"

MATERIALS LIST △3

ITEM	QTY	DESCRIPTION
1	1	8" METER *
2	2	12" OR 18" RESILIENT SEAT GATE VALVE FxF
3	1	12" OR 18" VICTAULIC COUPLING
4	1	12"X6" OR 18"X6" FLG x VICTAULIC NIPPLE
5	1	12" OR 18" FLG x VICTAULIC NIPPLE (LENGTH VARIES)
6	1	12" OR 18" F x F SPOOL (LENGTH VARIES)
7	1	12"X24" OR 18"X24" FLANGED SPOOL
8	15'+/-	15'+/-2" COPPER TUBING TYPE K
9	2	2"x90 DEG COPPER SWEAT ELL
10	4	2" COPPER SWxIPM ADAPTER, (CORP STOP W/PVC)
11	2	2-1/2"x4" SERVICE SADDLE W/2-1/2"x2"BRASS RED BUSHING, (2" SERVICE CLAMP W/PVC)
12	1	BLIND FLANGE (IF REQUIRED)
13	1	2" BRASS CURB STOP
14		12" OR 18" PIPE
15	1	UTILITY BOX/VAULT **
16	1	TORSION SPRING 2-PC LID : PARKWAY OR TRAFFIC COVER (ALUMINUM), ROADWAY APPLIC. TO MEET AASHTO H-20 DIRECT TRAFFIC RATING (STEEL).
17	1	PRECAST CONCRETE BASE W/8" SUMP **** △1
△2 18	1	WATER METER STRAINER
△3 19	1	(IP) COUPLING AND PLUG (SEE NOTE 15)

△3 NOTE: ALL MATERIALS SHALL MATCH THE SERVICE LATERAL PIPELINE SIZE EXCLUDING BYPASS LINE.

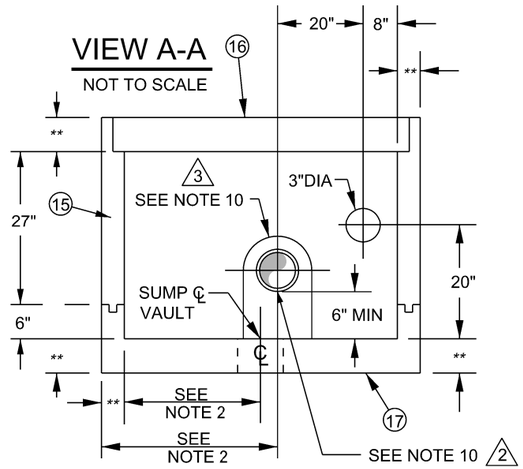

REVISIONS

NO.	DATE	INITIAL	DESCRIPTION	APP'D	DATE
△3	6-12-15	GS	ADDED FLOW RATE TABLE, TEST PORT, B-976 REFERENCE TO NOTE 5, MATERIAL LIST, AND NOTES 11, 12, 13, 14, 15, & 16.	AGA	6/19/15
△2	10/30/06	RE	ADDED NOTE # 10 & MATERIAL LIST # 18 WATER STRAINER & KNOCKOUT HOLE LOCATIONS	JM	11/2/06

APPROVALS

	INITIAL	DATE
DESIGN	JVS	12/9/85
CONSTRUCTION	JDA	
INSPECTION		
OPERATIONS	DWH	
SUBMITTED	LM	2/10/86

EASTERN MUNICIPAL WATER DISTRICT

EASTERN MUNICIPAL WATER DISTRICT

EASTERN MUNICIPAL WATER DISTRICT
STANDARD DRAWING

8" METER INSTALLATION

REFERENCES: REPLACES B-581

FILE I.D.: \kauai\eng\std dwgs\B-636.dgn

SCALE: NONE

DRAWN BY: SKD

APPROVED James H. Bunts, Jr 2/12/86
DATE

B-636 △3

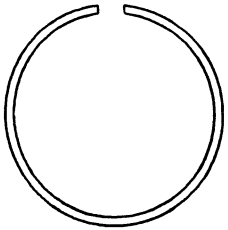

PREROLLED ROD PER MFGR'S REQ'S
DETAIL "A"

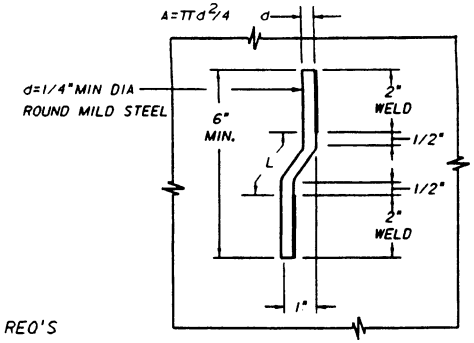

BONDING JUMPER
DETAIL "B"

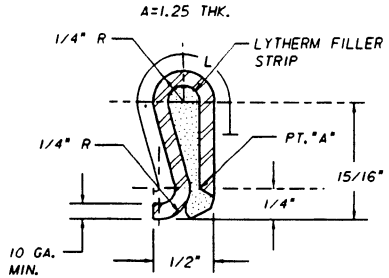

BONDING CLIP
DETAIL "C"

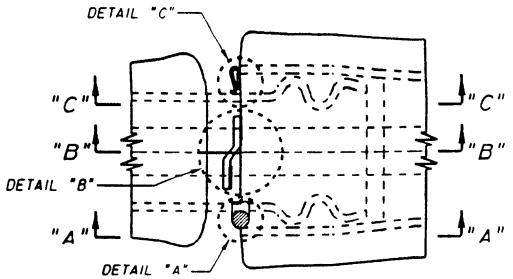

STEEL CYLINDER
PLAN

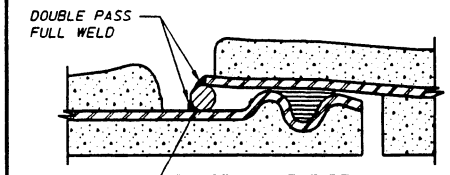

SWAGE JOINT PIPE
SECTION "A"-"A"

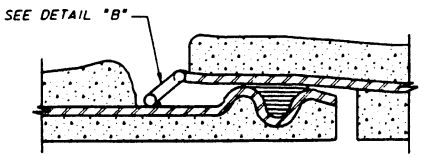

SWAGE JOINT PIPE
SECTION "B"-"B"

BONDING JUMPER JOINT

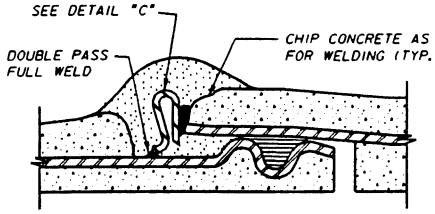

SWAGE JOINT PIPE
SECTION "C"-"C"

BONDING CLIP JOINT

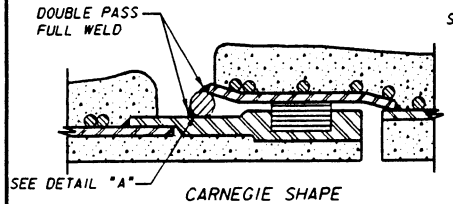

CARNEGIE SHAPE
SECTION "A"-"A"

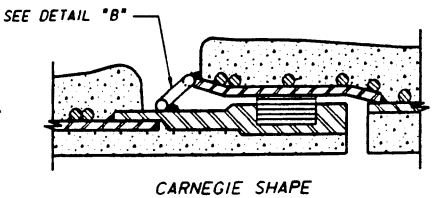

CARNEGIE SHAPE
SECTION "B"-"B"

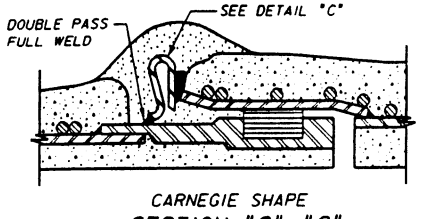

CARNEGIE SHAPE
SECTION "C"-"C"

NOTES

1. PIPE SHALL BE CLEANED TO BARE METAL PRIOR TO WELDING BONDING JUMPER OR CLIP.
2. PIPE SHALL BE ASSEMBLED IN TRENCH PRIOR TO WELDING BONDING JUMPER OR CLIP.
3. BONDING JUMPER OR CLIP SHALL BE PROTECTED DURING FIELD MORTARING OF PIPE JOINT.
4. 30" AND LARGER PIPE SHALL HAVE (2) TWO BONDING JUMPERS OR (2) TWO CLIPS MINIMUM.
5. STEEL BONDING CLIP MATERIAL SPECIFICATION:
   ASTM A366 (COMMERCIAL QUALITY)
   CUT LENGTH: 2-1/2"+/-1/16"
   WIDTH: 1-1/4"+/-1/16"
   LYTHERM FILLER STRIP TO BE 1"x1-1/2" WIDE TO OVERLAP SIDES OF CLIP.
   CRIMP BONDING CLIP OVER FILLER AT POINT "A" IN DETAIL "C" TO COMPRESS FILLER.
6. RUBBER GASKETS AND JOINT BONDS NOT REQUIRED FOR WELDED JOINTS.
7. N=MINIMUM NUMBER OF JOINT BONDS PER PIPE JOINT.
   L=LENGTH OF BOND JUMPER OR CLIP (IN.).
   A=AREA OF BOND JUMPER OR CLIP (SQ. IN.).
   W=WEIGHT OF STEEL CYLINDER PER FOOT OF PIPE (LB/FT).
   $N \geq 5.12 \times 10^{-4} LW/A$

WELDED JOINT DETAILS

BONDED RUBBER GASKET JOINT DETAILS

REVISIONS					
NO.	DATE	INITIAL	DESCRIPTION	APP'D	DATE
1	1/15/99	GR	REDRAWN W/CADD ON MYLAR	[illegible]	5/3/99

APPROVALS	INITIAL	DATE
DESIGN	JVS	1/13/86
CONSTRUCTION		
INSPECTION	JEW	
OPERATIONS	DWH	
SUBMITTED	LAM	4/9/86

EASTERN MUNICIPAL WATER DISTRICT

EASTERN MUNICIPAL WATER DISTRICT
STANDARD DRAWING

STEEL CYLINDER PIPE
FIELD JOINT DETAILS
WELDED, BONDED & RUBBER GASKETS

REFERENCES:
FILE I.D.: d_standards; b638.dgn

SCALE: NONE
DRAWN BY SKD

RECOMMENDED _____ DIRECTOR OF ENGINEERING DATE

APPROVED James H. Bunts, Jr. April 22, 1986 CHIEF ENGINEER DATE

B-638

1

OUTLET ORIENTATION

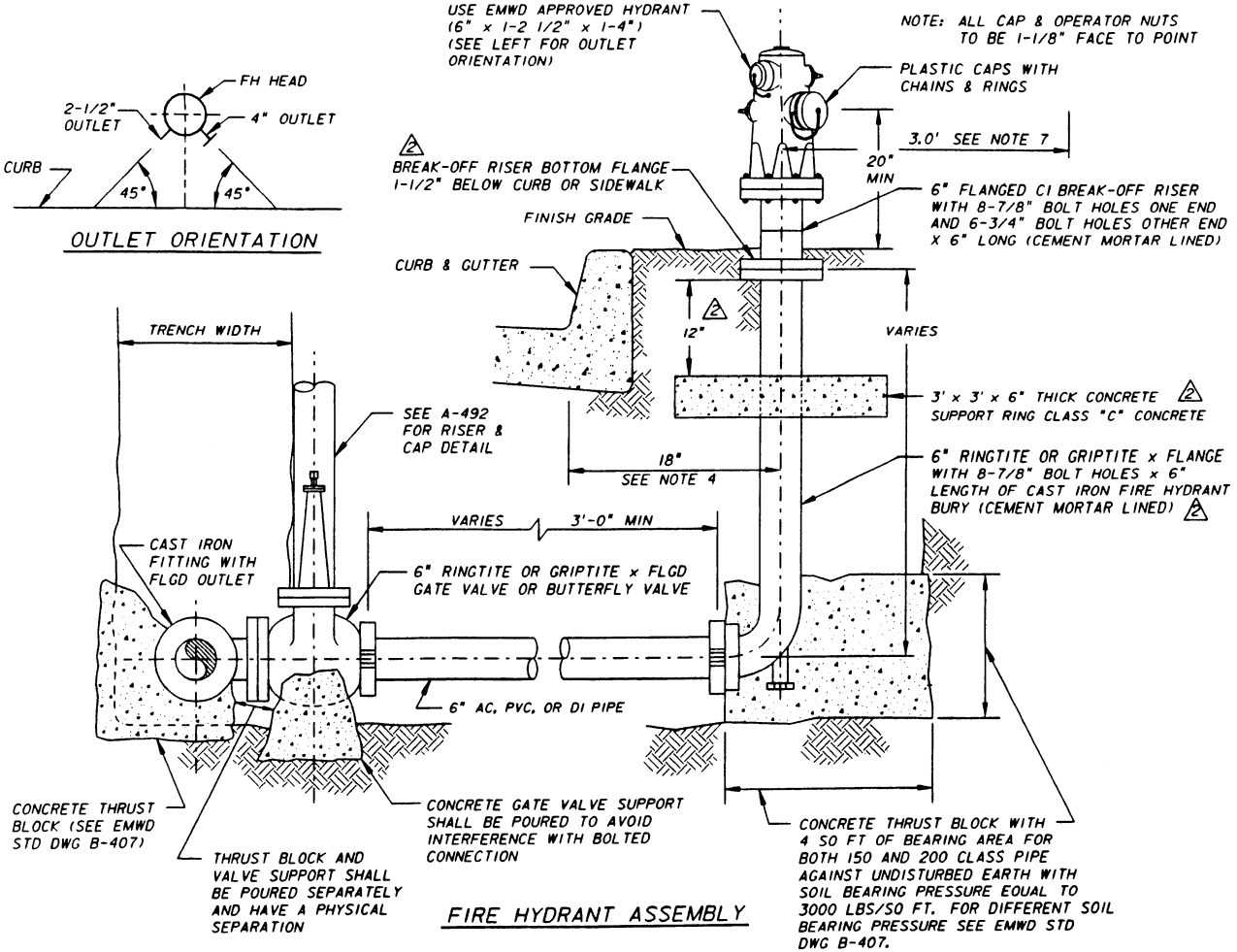

FIRE HYDRANT ASSEMBLY

GENERAL NOTES

2 1. PAINTS:
FIRE HYDRANTS TO BE PAINTED WITH REFLECTIVE SCOTCHLITE S-368 OR S-370 OR APPROVED EQUAL.
HYDRANT TOPS AND NOZZLE CAPS, 1500 GPM OR GREATER TO BE LIGHT BLUE.
HYDRANT TOPS AND NOZZLE CAPS, 1000 GPM TO 1499 GPM TO BE GREEN.
HYDRANT TOPS AND NOZZLE CAPS, 500 GPM TO 999 GPM TO BE ORANGE.
HYDRANT TOPS AND NOZZLE CAPS, LESS THAN 500 GPM TO BE RED.
CONTRACTOR MAY LEAVE FIRE HYDRANT STANDARD PRIME COATED AND MAKE FINANCIAL ARRANGEMENTS FOR THE CITY TO FINISH COAT WITH SPECIAL PAINT AND TO SET REFLECTIVE MARKERS.

2 2. USE THRUST BLOCKS PER B-407 FOR ACP. USE RESTRAINED JOINTS PER B-663 FOR PVC AND DUCTILE IRON. CONCRETE FOR THRUST BLOCKS AND SUPPORTS TO BE CLASS "C" (2000 PSI) CONCRETE.

3. ALTERNATE MATERIALS MAY BE USED WHEN SPECIFIED.

4. FIRE HYDRANT LOCATIONS:
A. FIRE HYDRANT SHALL BE PLACED:
1. 1'-6" BEHIND CURB FACE WHEN WIDTH OF SIDEWALK IS 8' OR WIDER.
2. 7'-6" BEHIND CURB FACE WHEN WIDTH OF SIDEWALK IS 6' WIDE.
3. 7'-6" BEHIND CURB FACE WHEN THERE IS NO SIDEWALK.
2 4. 1'-6" WITHIN ROAD RIGHT-OF-WAY WHEN NO CURBS OR SIDEWALKS ARE PROPOSED.
B. FIRE HYDRANT TO BE 1' BACK FROM INTERSECTION OF SIDEWALK WITH CORNER APRON.
C. AT OTHER THAN STREET INTERSECTIONS FIRE HYDRANTS TO BE ON LOT LINES.

2 5. FIELD COATING FOR EXPOSED PIPE SHALL BE PER EMWD SPECIFICATIONS AND APPROVED MATERIALS.

2 6. LENGTH OF FIRE HYDRANT BURY TO BE DETERMINED BY THE DIFFERENCE IN ELEVATION BETWEEN THE CENTER GRADE OF THE PIPELINE OUTLET AND THE BREAK-OFF RISER BOTTOM FLANGE.

7. A MINIMUM OF 3 FT CLEAR SPACE SHALL BE MAINTAINED AROUND THE CIRCUMFERENCE OF THE FIRE HYDRANT.

APPROVED: Bob Wilson DATE: 5/14/93

APPROVED: Brian McNabb DATE: 5/14/93

CITY OF SAN JACINTO

REVISIONS					
NO.	DATE	INITIAL	DESCRIPTION	APP'D	DATE
1	3/30/93		REDRAWN BY CADD ON MYLAR	VJB	7/2/93
2	3/7/00	GR	REV NOTES 1,2,4-6, ADD CONC SPPT & DIM	VJB	5/19/00

APPROVALS		
	INITIAL	DATE
DESIGN		
CONSTRUCTION		
INSPECTION		
OPERATIONS	DR	5/18/93
SUBMITTED	VJB	5/19/93

EASTERN MUNICIPAL WATER DISTRICT

EASTERN MUNICIPAL WATER DISTRICT
STANDARD DRAWING

6" x 1-2 1/2" x 1-4" FIRE HYDRANT INSTALLATION – AC, PVC, DI PIPE CITY OF SAN JACINTO

REFERENCES: ORIG DRAWN BY SKD 3/87
FILE I.D.: D_STANDARDS/B645.DGN

SCALE: NONE
DRAWN BY

RECOMMENDED Joseph D. Van Sichle 6/2/93
DIRECTOR OF ENGINEERING DATE

APPROVED G. Hooita Rugge 7/2/93
CHIEF ENGINEER DATE

B-645 2

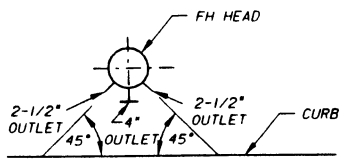

OUTLET ORIENTATION

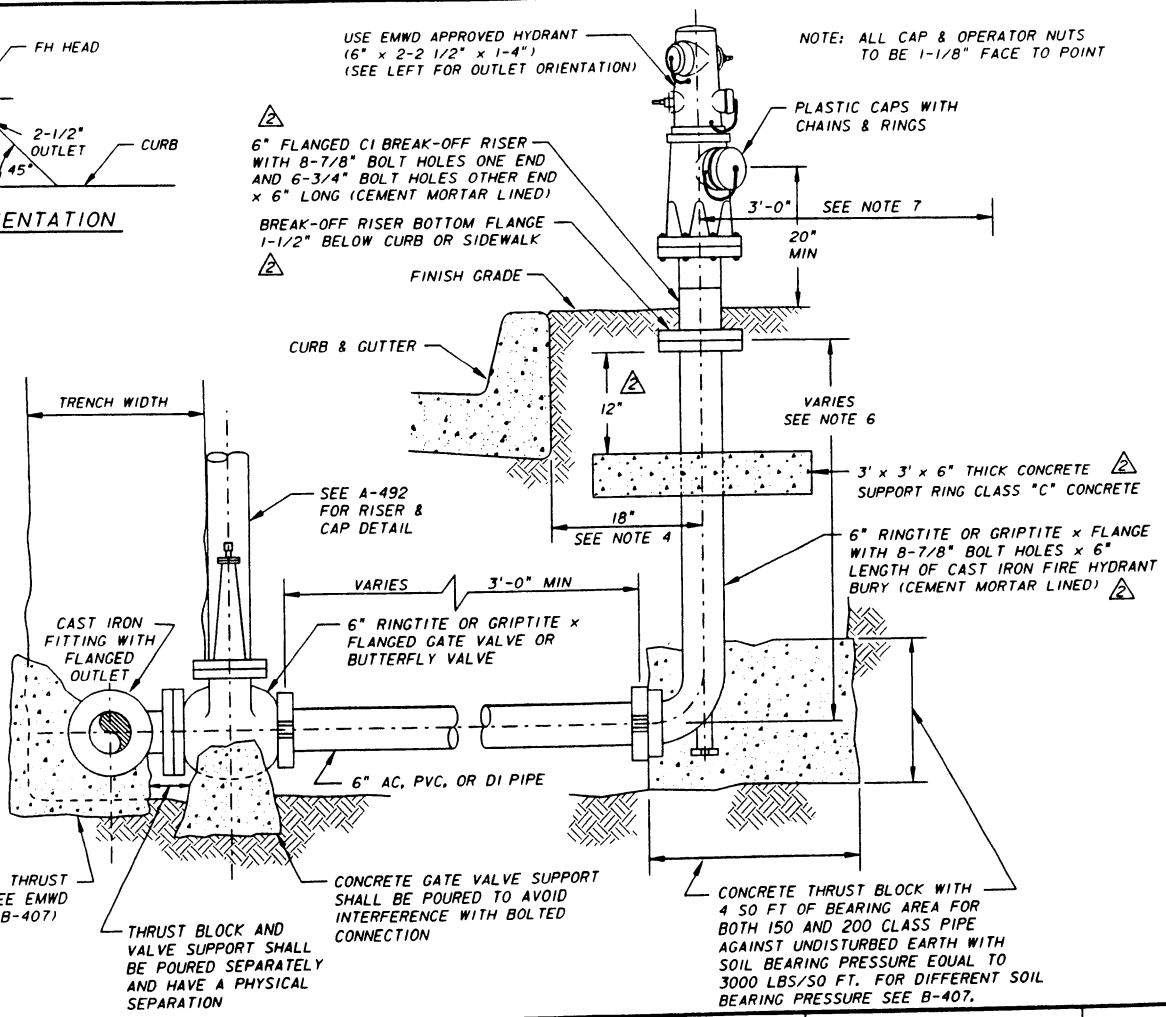

GENERAL NOTES

2 1. PAINTS:
FIRE HYDRANTS TO BE PAINTED WITH REFLECTIVE SCOTCHLITE S-368 OR S-370 OR APPROVED EQUAL.
HYDRANT TOPS AND NOZZLE CAPS, 1500 GPM OR GREATER TO BE LIGHT BLUE.
HYDRANT TOPS AND NOZZLE CAPS, 1000 GPM TO 1499 GPM, TO BE GREEN.
HYDRANT TOPS AND NOZZLE CAPS, 500 GPM TO 999 GPM, TO BE ORANGE.
HYDRANT TOPS AND NOZZLE CAPS, LESS THAN 500 GPM, TO BE RED.
CONTRACTOR MAY LEAVE FIRE HYDRANT STANDARD PRIME COATED AND MAKE FINANCIAL ARRANGEMENTS FOR THE CITY TO FINISH COAT WITH SPECIAL PAINT AND TO SET REFLECTIVE MARKERS.

2 2. USE THRUST BLOCKS PESR B-407 FOR ACP. USE RESTRAINED JOINTS B-663 FOR PVC AND DUCTILE IRON. CONCRETE FOR THRUST BLOCKS AND SUPPORTS TO BE CLASS "C" (2000 PSI) CONCRETE.

3. ALTERNATE MATERIALS MAY BE USED WHEN SPECIFIED.

4. FIRE HYDRANT LOCATIONS:
A. FIRE HYDRANT SHALL BE PLACED
1. 1'-6" BEHIND CURB FACE WHEN WIDTH OF SIDEWALK IS 8' OR WIDER.
2. 7'-6" BEHIND CURB FACE WHEN WIDTH OF SIDEWALK IS 6' WIDE.
3. 7'-6" BEHIND CURB FACE WHEN THERE IS NO SIDEWALK.
2 4. 1'-6" WITHIN ROAD RIGHT-OF-WAY WHEN NO CURBS ORSIDEWALKS ARE PROPOSED.
B. FIRE HYDRANT TO BE 1' BACK FROM INTERSECTION OF SIDEWALK WITH CORNER APRON.
C. AT OTHER THAN STREET INTERSECTIONS FIRE HYDRANTS TO BE ON LOT LINES

5. FIELD COATING FOR EXPOSED PIPE SHALL BE PER EMWD SPECIFICATIONS AND APPROVED MATERIALS.

2 6. LENGTH OF FIRE HYDRANT BURY TO BE DETERMINED BY THE DIFFERENCE IN ELEVATION BETWEEN THE CENTER GRADE OF THE PIPELINE OUTLET AND THE BREAK-OFF RISER BOTTOM FLANGE.

7. A MINIMUM 3 FT CLEAR SPACE SHALL BE MAINTAINED AROUNDTHE CIRCUMFERENCE OF THE FIRE HYDRANT.

APPROVED: Bob Wilson DATE: 5/14/93

APPROVED: Brian McNabb DATE: 5/14/93

CITY OF SAN JACINTO

REVISIONS					
NO.	DATE	INITIAL	DESCRIPTION	APP'D	DATE
1	3/31/93		REDRAWN BY CADD ON MYLAR	VJB	7/2/93
2	5/17/00	GR	REVISED NOTES 1,4,6, CALLOUT & ALL FONT	VJB	5/19/00

APPROVALS		
	INITIAL	DATE
DESIGN		
CONSTRUCTION		
INSPECTION		
OPERATIONS	PR	5/18/93
SUBMITTED	VJB	5/19/93

EASTERN MUNICIPAL WATER DISTRICT

EASTERN MUNICIPAL WATER DISTRICT
STANDARD DRAWING

6" x 2-2 1/2" x 1-4" FIRE HYDRANT INSTALLATION—AC, PVC, DI PIPE CITY OF SAN JACINTO

REFERENCES: ORIG DRAWN BY WDS 7/88
FILE I.D.: D_STANDARDS/B650.DGN

SCALE: NONE
DRAWN BY

RECOMMENDED Joseph D. Van Sichle DIRECTOR OF ENGINEERING 6/1/93 DATE

APPROVED G. Hoote Ruggo CHIEF ENGINEER 7/2/93 DATE

B-650 2

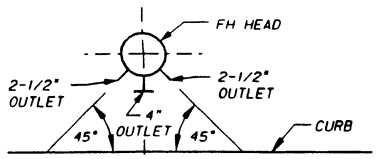

OUTLET ORIENTATION

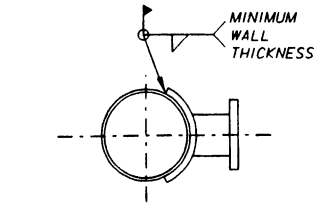

USE 6" FLANGED SADDLE OUTLET FOR INSTALLATION ON 12" OR LARGER PIPELINE

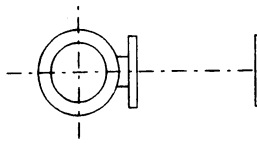

USE CAST IRON TEE FOR INSTALLATION ON 6" OR 8" PIPELINE

PIPELINE INSTALLATION

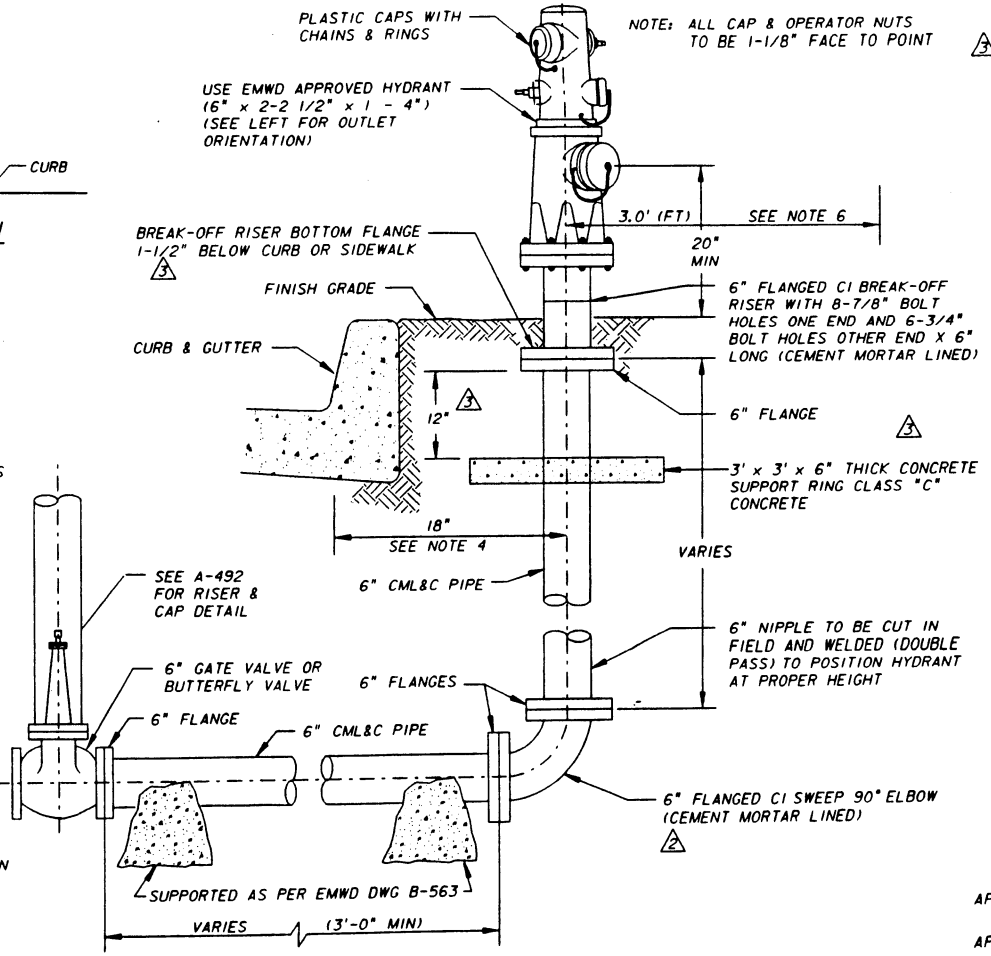

FIRE HYDRANT ASSEMBLY

GENERAL NOTES

3 1. PAINTS:
FIRE HYDRANTS TO BE PAINTED WITH REFLECTIVE SCOTCHLITE S-368 OR S-370 OR APPROVED EQUAL.
HYDRANT TOPS AND NOZZLE CAPS, 1500 GPM OR GREATER TO BE LIGHT BLUE.
HYDRANT TOPS AND NOZZLE CAPS, 1000 GPM TO 1499 GPM TO BE GREEN.
HYDRANT TOPS AND NOZZLE CAPS, 500 GPM TO 999 GPM TO BE ORANGE.
HYDRANT TOPS AND NOZZLE CAPS, LESS THAN 500 GPM TO BE RED.
CONTRACTOR MAY LEAVE FIRE HYDRANT STANDARD PRIME COATED AND MAKE FINANCIAL ARRANGEMENTS FOR THE CITY TO FINISH COAT WITH SPECIAL PAINT AND TO SET REFLECTIVE MARKERS.

2. ALL FLANGES SHALL BE FULL WELDED (DOUBLE PASS) AND COATED IN THE FIELD AS DIRECTED BY ENGINEER PER NOTE 5.

3. ALTERNATE MATERIALS MAY BE USED WHEN SPECIFIED.

4. FIRE HYDRANT LOCATIONS:
A. FIRE HYDRANT SHALL BE PLACED:
1. 1'-6" BEHIND CURB FACE WHEN WIDTH OF SIDEWALK is 8' OR WIDER.
2. 7'-6" BEHIND CURB FACE WHEN WIDTH OF SIDEWALK is 6' WIDE.
3. 7'-6" BEHIND CURB FACE WHEN THERE IS NO SIDEWALK.
3 4. 1'-6" WITHIN ROAD RIGHT-OF-WAY WHEN NO CURBS OR SIDEWALKS ARE PROPOSED.
B. FIRE HYDRANT TO BE 1' BACK FROM INTERSECTION OF SIDEWALK WITH CORNER APRON.
C. AT OTHER THAN STREET INTERSECTIONS FIRE HYDRANTS TO BE ON LOT LINES.

5. FIELD COATING FOR EXPOSED PIPE SHALL BE PER EMWD SPECIFICATIONS AND APPROVED MATERIALS.

6. A MINIMUM OF 3 FT CLEAR SPACE SHALL BE MAINTAINED AROUND THE CIRCUMFERENCE OF THE FIRE HYDRANT.

APPROVED: Bob Wilson DATE: 5/14/93

APPROVED: Brian McNabb DATE: 5/14/93

CITY OF SAN JACINTO

REVISIONS					
NO.	DATE	INITIAL	DESCRIPTION	APP'D	DATE
1	4/1/93		REDRAWN BY CADD ON MYLAR	VJB	7/2/93
2	10/27/94	KER	REVISED ELBOW CALLOUT	VJB	10/27/94
3	5/17/00	GR	REVISED NOTES 1,4, CALLOUT & ALL FONT	VJB	5/19/00

APPROVALS		
	INITIAL	DATE
DESIGN		
CONSTRUCTION		
INSPECTION		
OPERATIONS	PR	5/18/93
SUBMITTED	VJB	5/19/93

EASTERN MUNICIPAL WATER DISTRICT

REFERENCES: ORIG DRAWN 7/88

FILE I.D.: D_STANDARDS/B651.DGN

SCALE: NONE

DRAWN BY

RECOMMENDED Joseph D. Van Sickle 6/1/93
DIRECTOR OF ENGINEERING DATE

EASTERN MUNICIPAL WATER DISTRICT
STANDARD DRAWING

6" x 2-2 1/2" x 1-4" FIRE HYDRANT INSTALLATION-STEEL CITY OF SAN JACINTO

APPROVED G. Hoote Rugge 7/2/93
CHIEF ENGINEER DATE

B-651 3

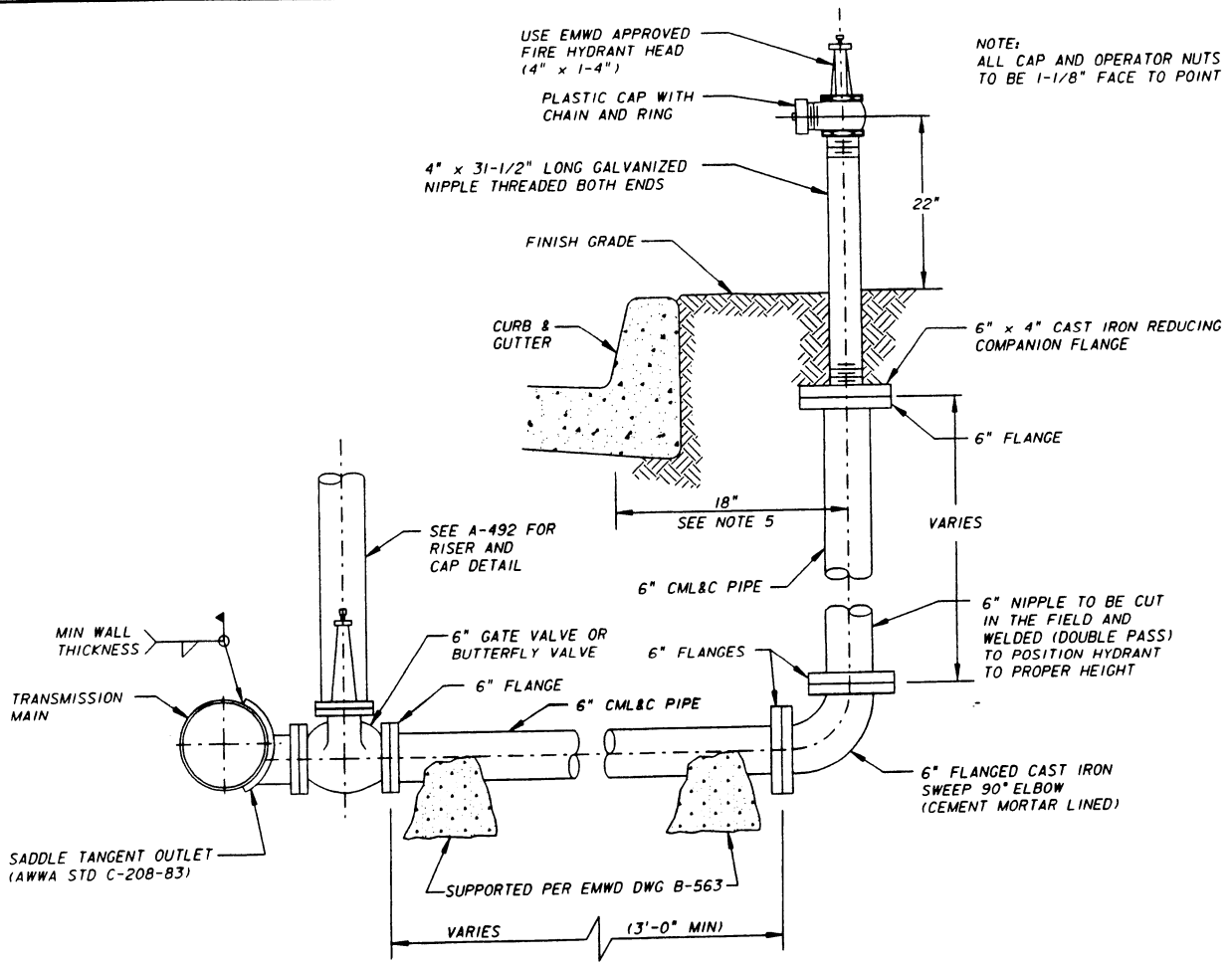

NOTE:
ALL CAP AND OPERATOR NUTS TO BE 1-1/8" FACE TO POINT

BLOW-OFF ASSEMBLY

GENERAL NOTES

1. PAINTS:
   BLOW-OFF TO BE PAINTED WITH APPROVED YELLOW.
2. ALTERNATE MATERIALS MAY BE USED WHEN SPECIFIED.
3. ALL FLANGES SHALL BE FULL WELDED (DOUBLE PASS) AND COATED IN THE FIELD AS DIRECTED BY THE ENGINEER AS PER NOTE 3.
4. FIELD COATING FOR EXPOSED PIPE SHALL BE PER EMWD SPECIFICATIONS AND APPROVED MATERIALS.
5. BLOW-OFF LOCATION:
   A. BLOW-OFF SHALL BE PLACED:
      1. 1'-6" BEHIND CURB FACE WHEN THE WIDTH OF THE SIDEWALK IS 8' OR WIDER.
      2. 7'-6" BEHIND CURB FACE WHEN THE SIDEWALK IS 6' WIDE.
      3. 7'-6" BEHIND THE CURB FACE WHEN THERE IS NO SIDEWALK.
      4. 1'-6" WITHIN ROAD RIGHT-OF-WAY WHEN NO CURBS OR SIDEWALKS ARE PROPOSED.
   B. BLOW-OFF TO BE 1' BACK FROM INTERSECTION OF THE SIDEWALK WITH CORNER APRON.
   C. AT OTHER THAN STREET INTERSECTION, BLOW-OFF TO BE ON A LOT LINE.

REVISIONS					
NO.	DATE	INITIAL	DESCRIPTION	APP'D	DATE
1	4/22/93		REDRAWN W/CADD ON MYLAR	VJB	5/19/93
2	4/17/00	GR	REVISED ALL FONT & NOTE 2 & 5	VJB	5/19/00

APPROVALS		
	INITIAL	DATE
DESIGN		
CONSTRUCTION		
INSPECTION		
OPERATIONS	DR	5/18/93
SUBMITTED	VJB	5/19/93

EASTERN MUNICIPAL WATER DISTRICT

EASTERN MUNICIPAL WATER DISTRICT
STANDARD DRAWING

6" x 1-4" BLOW-OFF INSTALLATION SADDLE TANGENT OUTLET STEEL PIPE

REFERENCES: ORIG DWG 4/89
FILE I.D.: D_STANDARDS/B653.DGN

SCALE: NONE
DRAWN BY

RECOMMENDED Joseph D. Van Sichle, DIRECTOR OF ENGINEERING 6/1/93 DATE

APPROVED G. Hoole Rugge, CHIEF ENGINEER 7/2/93 DATE

B-653 2

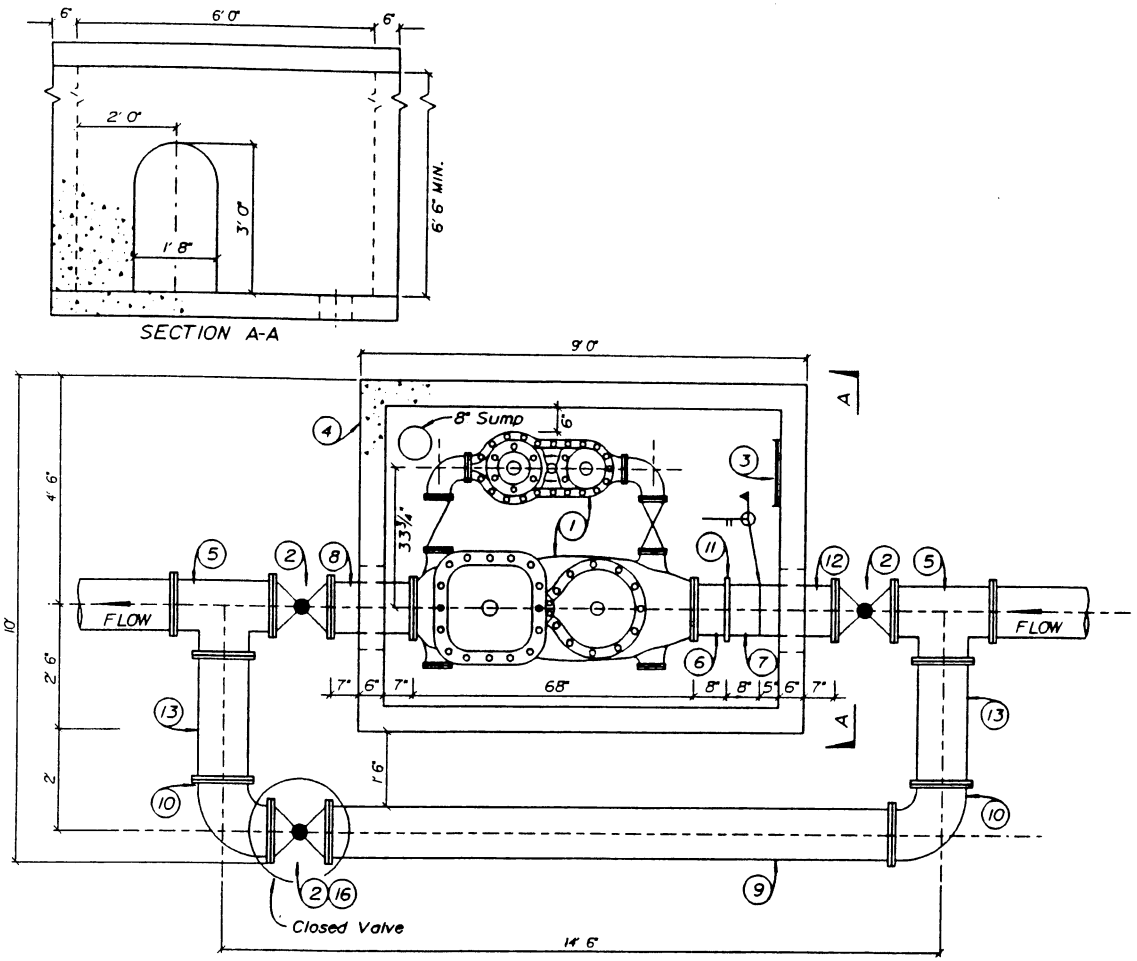

⚠1 (ALL LISTED MATERIALS TO BE E.M.W.D. APPROVED)

MATERIAL LIST

(1)	1ea.	10" x 12" Detector Meter with 6" Compound Bypass ⚠1
(2)	3ea.	12" Resilient Seat Gate Valve
⚠(3)	1ea.	Ladder per B-519 or B-520
⚠(4)	1ea.	8'x6'x6'-6" DEEP VAULT W/BASE & TORSION SPRING ASSISTED, TWO-PIECE parkway cover hinged S.A. 20"x36". K.O. centered 24" from one side of inside vault each end. (SECTION A-A)
(5)	2ea.	12" Flanged Tee
(6)	1ea.	12"x8" Flanged Vitaulic Nipple
(7)	1ea.	12"x8" Vitaulic Nipple x Plain
(8)	1ea.	12"x20" Flanged Spool
(9)	1ea.	12"x11'-4⅜" Flanged Spool (to be adjusted in field)
(10)	2ea.	12"-90° Flanged Elbow
(11)	1ea.	12" Vitaulic Coupling
(12)	1ea.	12"x18" C.M.L.&C. Flanged x Plain
(13)	2ea.	12"x30" Flanged Spool
(14)	3ea.	Meter "Read Hole" Cover A-496 Read Holes are to be positioned over meter registers after meters are installed.
(15)	2ea.	Valve can, riser and cap per A-492
(16)	1ea.	Valve can, riser and cap per A-492 with locking device
(17)	~	Meter Support as required
(18)	~	Bolts and gaskets as required

NOTES

⚠1. Vault lid to be primed and painted E.M.W.D. approved Tan.

⚠2. METER REGISTERS TO READ IN CUBIC FEET.

3. All C.M.L. & C. Pipe to meet E.M.W.D. Specifications 15061.

4. Backflow prevention device per B-597 will be required.

5. Meter must be set in a horizontal position and have at least eight diameters of straight pipe at inlet end.

FLOW: 1½ G.P.M. - 5400 G.P.M.

FILE ID-

REVISIONS				
NO.	DATE	INITIAL	DESCRIPTION	APP'VD
⚠1	4-8-94	KER	ADDED NOTES & REVISED MATERIALS LIST	VJB 4/8/94

REFERENCES

APPROVALS

DESIGN	OPER.	CONST.	R/W
VJB			—

SCALE	N.T.S.	DATE
DESIGNED	J.J.W.	3-2-90
DRAWN (CADD)	J.J.W.	3-2-90
TRACED		
CHECKED	S.K.D.	3-5-90
SUBMITTED		
RECOMMENDED		3-9-90

EASTERN MUNICIPAL WATER DISTRICT
RIVERSIDE COUNTY, CALIFORNIA

STANDARD DRAWING
10" x 12" DETECTOR METER WITH 6" COMPOUND BYPASS

APPROVED William E. Plummer 3-9-90
CHIEF ENGINEER DATE

W.O.
C.O.
COORD.
SHT. 1 OF 1

B-654 ⚠1

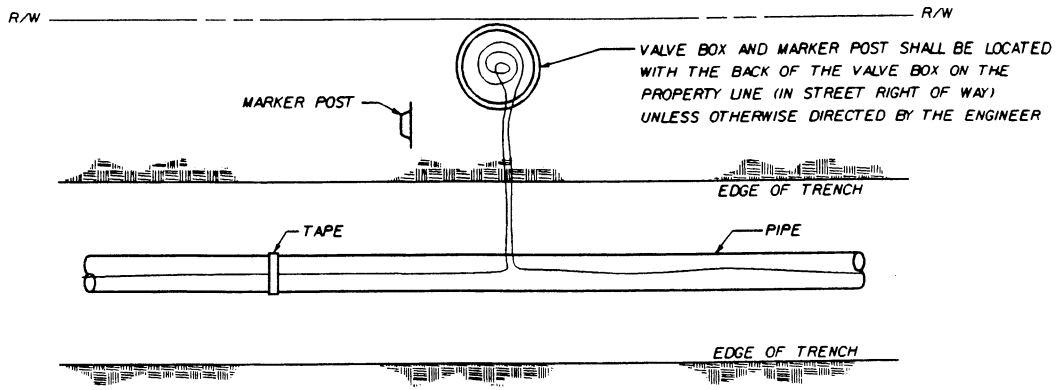

PLAN VIEW

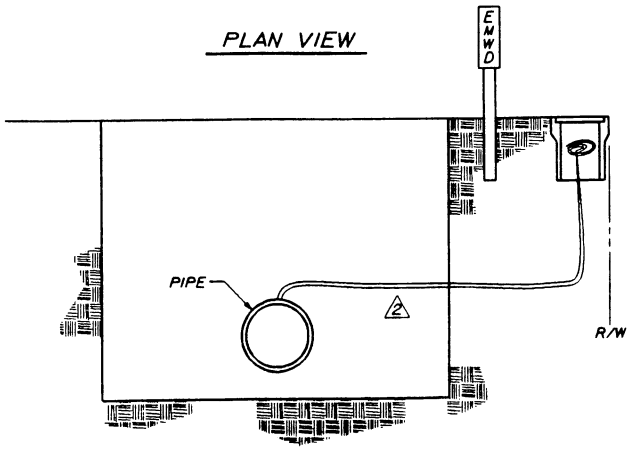

TYPICAL TRENCH SECTION

NOTES:

1. LOCATOR WIRE TO BE 14 GAUGE SOLID COPPER WIRE UF, THWN, OR THHN.
2. LOCATOR WIRE SHALL BE BROUGHT TO THE SURFACE AT 660 FT OC MAX BY FIRE HYDRANTS OR INSTALL EMWD MARKER POSTS (B-665). GIVE STATIONS AT VALVE BOXES. (FOR TRACT CONSTRUCTION CHISEL "LW" IN FACE OF CURB IN LIEU OF MARKER POSTS).
3. LOOP 2 FEET OF WIRE IN VALVE BOX WITHIN 2 FEET OF FIRE HYDRANT OR EMWD MARKER POST.
4. WIRE TO BE CONTINUOUS STRAND.
5. LOCATOR WIRE SHALL BE INSTALLED OVER ALL WATERLINES. RECLAIMED WATERLINES AND FORCE MAINS WHETHER OR NOT TELEMETRY WIRE IS BURIED WITH THE PIPE.
6. USE CAST IRON COVER LABELED WATER, SEWER, OR RECLAIMED (RECLAIMED TO BE PAINTED LAVENDER).
7. FOR PIPE DEPTHS GREATER THAN 8 FT LOCATOR WIRE SHALL BE PLACED ABOVE PIPE AT MAX 8 FT DEPTH. MARKER TAPE SHALL BE PLACED 1 FT ABOVE THE LOCATOR WIRE.
3. 8. A LOCATIBILITY TEST IS TO BE PERFORMED ON ALL LOCATOR WIRES.
9. SPLICES TO BE DONE WITH A CRIMPABLE BUTT CONNECTOR.

REVISIONS					APPROVALS		
NO.	DATE	INITIAL	DESCRIPTION	APP'D DATE		INITIAL	DATE
1	5/6/96	KER	REDRAWN W/CAD ON MYLAR	VJB 5/8/96	DESIGN	VJB	8/90
2	8/5/96	KER	REVISED WIRE LOCATION	VJB 8/6/96	CONSTRUCTION		
3	5/4/99	GR	REVISED NOTE 8	VJB 5/6/99	INSPECTION		
					OPERATIONS	MWA	8/90
					SUBMITTED		

REFERENCES: ORIGINAL B-656 CREATED 7/18/90 (JJW)
FILE I.D.: /USR/KARL/STNDRDS/B656.DGN

SCALE: NONE
DRAWN BY K.E.R.

RECOMMENDED Joseph Van Sichle 8/28/90
DIRECTOR OF ENGINEERING DATE

EASTERN MUNICIPAL WATER DISTRICT

EASTERN MUNICIPAL WATER DISTRICT
STANDARD DRAWING

LOCATOR WIRE INSTALLATION

APPROVED William P. Plummer 8/31/90
CHIEF ENGINEER DATE

B-656

3

NOTES: (5)

1. PROVIDE A USC APPROVED BACKFLOW PREVENTION ASSEMBLY AS DESIGNATED BY EMWD APPROVED MATERIALS LIST SPECIFICATIONS.
2. (7) RPDA TO BE USED ONLY FOR HIGH-HAZARD CONDITIONS, AS SPECIFIED BY EMWD AND DEPICTED ON PLANS.
3. EMWD MAINTENANCE RESPONSIBILITY STOPS AT THE RIGHT OF WAY. THE CUSTOMER IS RESPONSIBLE TO TEST AND MAINTAIN THE BACKFLOW PREVENTION ASSEMBLY, IN ACCORDANCE WITH EMWD ADMINISTRATIVE CODE.
4. ONLY RIVERSIDE COUNTY CERTIFIED BACKFLOW TESTERS LISTED ON THE EMWD APPROVED BACKFLOW TESTER LIST ARE ALLOWED TO TEST BACKFLOW ASSEMBLIES WITHIN EMWD SERVICE AREA.
5. CERTIFICATION TESTING IS REQUIRED IMMEDIATELY AFTER AN ASSEMBLY IS RELOCATED, REPLACED, REPAIRED, NEW INSTALLATION ACCEPTANCE AND WATER DELIVERY PER EMWD ADMINISTRATIVE CODE PRIOR TO NEW INSTALLATION ACCEPTANCE AND WATER DELIVERY.
6. BACKFLOW PREVENTION ASSEMBLY SIZE SHALL BE BASED ON THE REQUIRED FIRE FLOW DEMAND.
7. BACKFLOW PREVENTION ASSEMBLY INSTALLATIONS INCLUDING ALL APPURTENANCES FOR THE SUPPLY OF DOMESTIC WATER SHALL COMPLY WITH THE REQUIREMENTS OF THE CALIFORNIA LEAD-FREE ACT AB1953. THE USE OF A DCDA FOR FIRE SYSTEMS OR LANDSCAPING ARE NOT REQUIRED TO BE LEAD-FREE.
8. BACKFLOW PREVENTION ASSEMBLIES SHALL BE LOCATED AS CLOSE AS PRACTICAL TO THE RIGHT OF WAY BUT NOT FURTHER THAN 3 FEET UNLESS A VARIANCE IS OBTAINED FROM AN EMWD CROSS-CONNECTION SPECIALIST PRIOR TO INSTALLATION. ASSEMBLY SHALL BE VISIBLE AND READILY ACCESSIBLE FROM THE RIGHT-OF-WAY AND MEET ALL CITY ZONING AND BUILDING CODES.
9. NO OUTLETS, TEES, OR CONNECTIONS SHALL BE ALLOWED BETWEEN EMWD RSGV AND BACKFLOW ASSEMBLY.
10. BACKFLOW PREVENTION ASSEMBLIES SHALL MAINTAIN A VERTICAL CLEARANCE FROM THE LOWEST POINT OF 12 INCHES (MINIMUM) TO 36 INCHES (MAXIMUM) ABOVE FINISHED GRADE, WITH SIDE AND TOP CLEARANCES OF 12 INCHES (MINIMUM) FROM ANY OBSTRUCTIONS IN ALL DIRECTIONS.
11. POLYETHYLENE ENCASEMENT SHALL BE INSTALLED PER ANSI/AWWA C105/A21.5 REQUIREMENTS. HIGH-DENSITY POLYETHYLENE (HDCLPE) SHALL BE A MINIMUM OF .004 (4 MIL) THICKNESS. LOW-DENSITY POLYETHYLENE (LLDPE) SHALL BE A MINIMUM OF .008 (8 MIL) THICKNESS.
12. ALL DUCTILE IRON JOINTS SHALL BE RESTRAINT TYPE.
13. ALL CML&C PIPE TO MEET EMWD SPECIFICATION 15061.

RECOMMENDATIONS:

14. PARALLEL INSTALLATIONS OF THE SAME TYPE OF BACKFLOW PREVENTION ASSEMBLIES ARE STRONGLY RECOMMENDED FOR ALL FACILITIES REQUIRING UNINTERRUPTED WATER SUPPLY, SUCH AS, HOSPITALS AND SCHOOLS.
15. FREEZE PROTECTION IS RECOMMENDED, BUT THE RELIEF VALVE MUST BE ABLE TO VENT FREELY AND TESTCOCK OPENINGS SHALL BE LEFT EXPOSED.
16. THEFT PREVENTION DEVICES ARE STRONGLY RECOMMENDED FOR BRONZE ASSEMBLIES. EMWD MUST BE PROVIDED ACCESS TO THE ASSEMBLY FOR TESTING. THEFT PREVENTION DEVICES SHALL PROVIDE ADEQUATE ACCESS FOR MAINTENANCE AND MAINTAIN PROPER DRAINAGE.

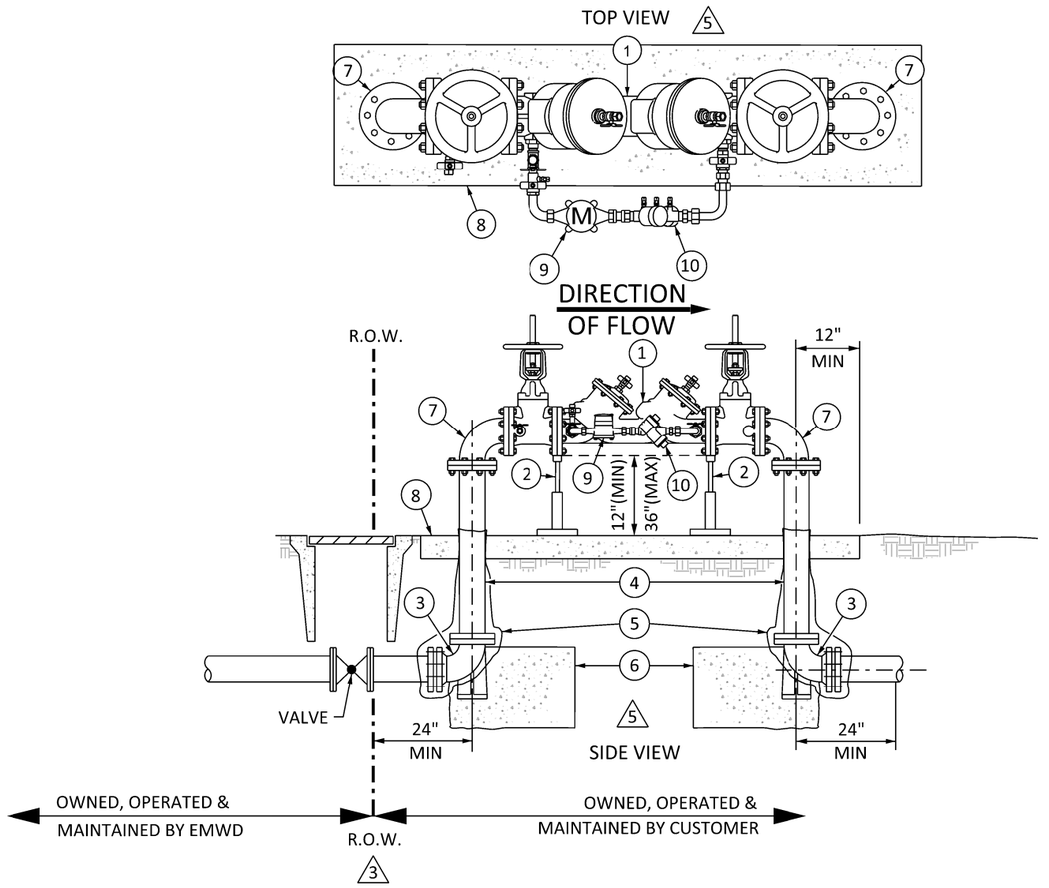

NOTE: ALL DI JOINTS SHALL BE RESTRAIN TYPE

DCDA & RPDA (2) (5)

(4) SIZE	RECOMMENDED FLOW (HEAD LOSS VARIES)
4"	1 GPM - 500 GPM
6"	1 GPM - 1,000 GPM
8"	1 GPM - 1,600 GPM
10"	1 GPM - 2,300 GPM
12"	1 GPM - 3,500 GPM

(5)

ITEM	DESCRIPTION
1	4" THRU 12" DCDA BACKFLOW PREVENTER ASSEMBLY WITH VALVES
2	ADJUSTABLE PIPE SUPPORT
3	DI BASE BEND WITH CL 150 FLANGE X MECHANICAL JOINT
4	CLASS 53 DUCTILE IRON PIPE WITH CL 150 FLANGES
5	POLYETHYLENE ENCASEMENT PER ANSI/AWWA C105/A21.5 (SEE NOTE 10)
6	CONCRETE THRUST BLOCK PER B-407
7	DUCTILE IRON 90° BEND WITH CL 150 FLANGES
8	36" WIDE X 4" THICK CONCRETE PAD. LENGTH VARIES PER BACKFLOW SIZE
9	DETECTOR ASSEMBLY BYPASS METER
10	DETECTOR ASSEMBLY BYPASS DOUBLE CHECK BACKFLOW DEVICE

REVISIONS

NO.	DATE	INITIAL	DESCRIPTION	APP'D	DATE
(7)	3/20/19	GS	ADDED NOTE NUMBER 2	AGA	3/20/19
(6)	6/2/17	GS	UPDATED TITLE BLOCK, FONT, NAME & LOGO	AGA	6/2/17
(5)	5/15/15	GS	REMOVED VAULT INSTALLATION , REVISED NOTES, PARTS LIST, RECOMMENDED FLOWS, ADDED TOP VIEW, AND REMOVED RPDA FROM DRAWING	AGA	5/15/15

APPROVALS

	INITIAL	DATE
DESIGN		
CONSTRUCTION		
INSPECTION	JEW	12/3/97
OPERATIONS	KG	12/5/97
SUBMITTED	VJB	12/2/97

emwd EASTERN MUNICIPAL WATER DISTRICT

REFERENCES:

FILE I.D.: \kauai\eng\std dwgs\B-657.dgn

SCALE: NONE

DRAWN BY: GS

RECOMMENDED _____ DIRECTOR OF ENGINEERING DATE

EASTERN MUNICIPAL WATER DISTRICT
STANDARD DRAWING

4", 6", 8", 10", OR 12" DOUBLE CHECK DETECTOR ASSEMBLY REDUCED PRESSURE DETECTOR ASSEMBLY

APPROVED Charlie Bachmann 12/3/97
ASSISTANT GENERAL MANAGER DATE

B-657 (7)

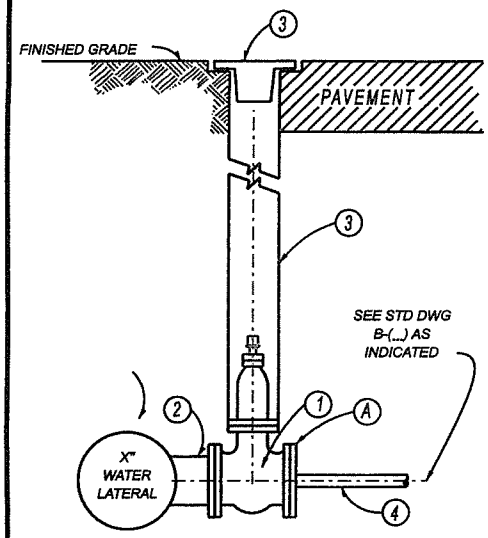

WATER LATERAL

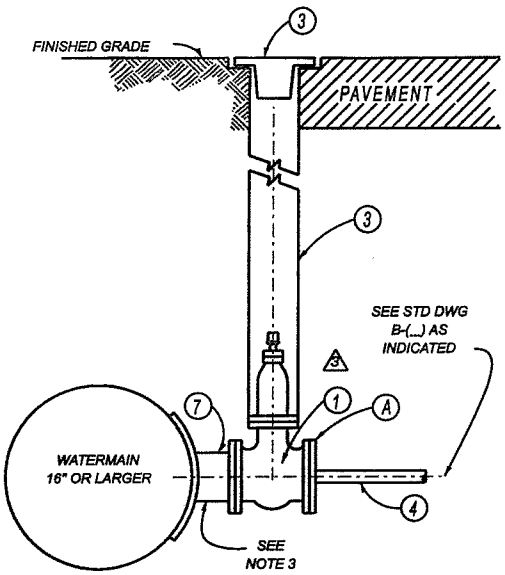

WATERMAIN 16" OR LARGER

MATERIAL LIST

ITEM	QTY.	DESCRIPTION	
(1)	1 ea.	4" R.S.G.V. OR B.F.V.	
(2)	1 ea.	X"x X"x 4" HxHxF or FxFxF TEE	
(3)	1 ea.	VALVE CAP AND RISER PER A-492	3
(4) (A)		1" SERVICE - COPPER	B-590, B-590-A B-591, B-591-A
	1 ea.	4"x 2" COMPANION FLANGE	
	1 ea.	2"x 1" TxT BRASS BUSHING	
	1 ea.	1" I.P.M.x 1" TUBE SIZE COMPRESSION CORP	
2 (A)		1-1/2" SERVICE - COPPER	B-342, B-342-A
	1 ea.	4"x 2" COMPANION FLANGE	
	1 ea.	2"x 1-1/2" TxT BRASS BUSHING	
	1 ea.	1-1/2" I.P.M.x 1-1/2" TUBE SIZE COMPRESSION CORP	
(A)		2" SERVICE - COPPER	B-344,-A,-B
	1 ea.	4"x 2-1/2" COMPANION FLANGE	
	1 ea.	2-1/2"x 2" TxT BRASS BUSHING	
	1 ea.	2" I.P.M.x 2" TUBE SIZE COMPRESSION CORP	
(A)		4" SERVICE	B-633, B-634 3
	1 ea.	4" RING FLANGE (CML&C) OR 4" FLG.x HUB ADPT. (ACP, DIP, PVC)	
(5)	16 ea.	5/8"x 3" BOLTS	
(6)	2 ea.	4" GASKETS	
(7)	1 ea.	4" FLANGED TAPPING SADDLE OUTLET (CML&C) OR 4"x W/L SIZE - TAPPING SLEEVE (ACP, DI, PVC)	
4			

NOTES

1. ALL MATERIALS SHALL CONFORM TO E.M.W.D. STANDARDS AND SPECIFICATIONS.
2. ALL MATERIALS SHALL BE SUBJECT TO E.M.W.D. APPROVAL.
3. FOR CONNECTIONS TO EXISTING WATER MAINS TAP TO BE PERFORMED BY E.M.W.D. FORCES.

REVISIONS					
NO.	DATE	INITIAL	DESCRIPTION	APP'D	DATE
1	11/6/95	KER	REVISED NOTE 1 & DELETED NOTE 8	VJB	11/6/95
2	1/11/03	C.M.	REVISE MATERIAL LIST TO BRASS BUSHING	VJB	10/15/03
3	9/22/06	R.E.	REVISE MATERIAL LIST	JM	9/26/06

APPROVALS		
	INITIAL	DATE
DESIGN	KER	7/10/95
ELEC.SERV.		
MECH.SERV.		
OPERATIONS	ML	10/19/95
FIELD SERV.	VJB	7/10/95

EASTERN MUNICIPAL WATER DISTRICT

EASTERN MUNICIPAL WATER DISTRICT
RIVERSIDE COUNTY, CALIFORNIA

SERVICE CONNECTIONS 1" THRU 4" ON WATER APPURTENANCE LATERAL OR WATERMAIN 16" OR LARGER

REFERENCES: SUPERCEDES A-534
FILE I.D.: \kaual\eng\std dwgs\b658.dgn
SCALE: AS SHOWN
DRAWN BY KER

RECOMMENDED — JOSEPH D. VANSICKLE, DIRECTOR OF ENGINEERING — 10/19/95 DATE

APPROVED — G. Hoote Rugge, DIRECTOR OF MAINTENANCE — 10/20/95 DATE

B-658

3

DETAIL 1

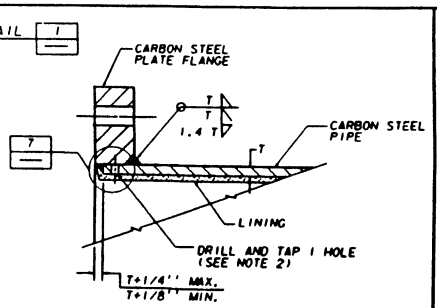

DETAIL 4

TYPICAL WELDING DETAIL FOR ALL ALIGNMENT SPOOLS WITH SLIP-ON FLANGES

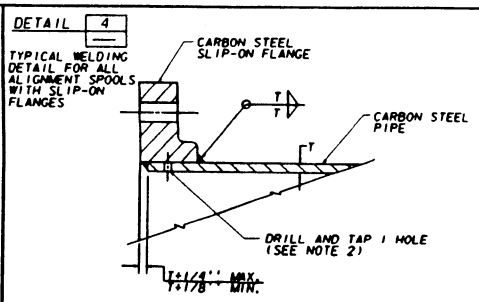

DETAIL 7

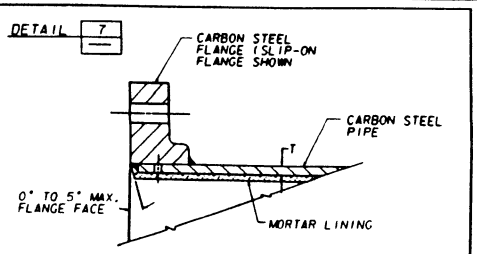

NOTES:

1. "T" INDICATES THE THICKNESS OF THE STEEL PIPE WHERE THE TYPICAL DETAIL IS CALLED OUT.
2. BEFORE WELDING, DRILL AND TAP NUMBER OF HOLES AS NOTED FOR 1/4" PIPE. CONTRACTOR TO PLUG WELD HOLES ON COMPLETION OF JOINT TEST.
3. DETAIL APPLIES TO EITHER COLLAR OR WRAPPER

DETAIL 2

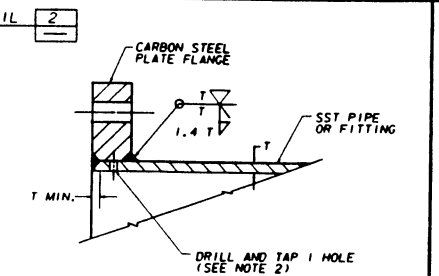

DETAIL 5

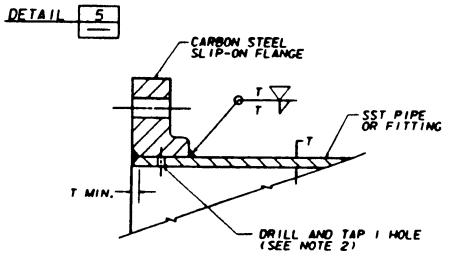

DETAIL 8

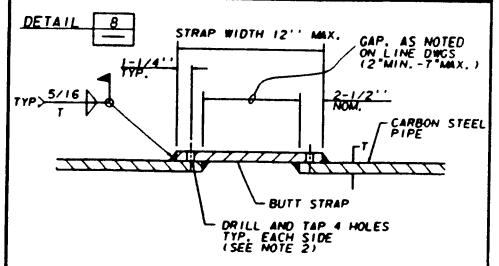

DETAIL 3

TYPICAL WELDING DETAIL FOR ALL ALIGNMENT SPOOLS WITH SLIP-ON FLANGES

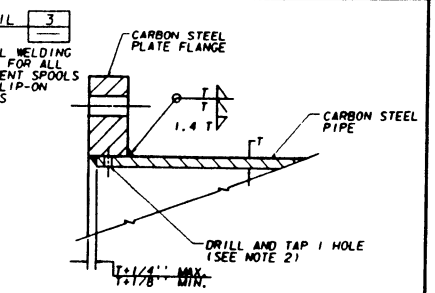

DETAIL 6

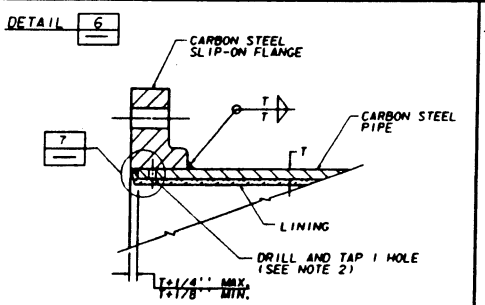

DETAIL 9

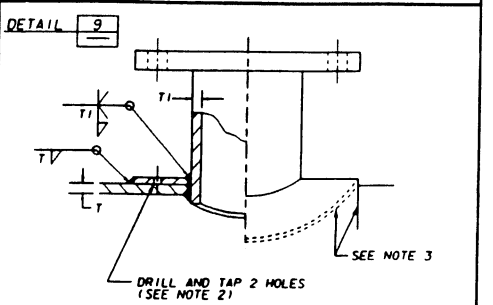

REVISIONS				
NO.	DATE	DESCRIPTION	APP'D	DATE

APPROVALS		
	INITIAL	DATE
DESIGN	K.E.R.	1/18/96
CONSTRUCTION		
INSPECTION	R.P.K	1/18/96
OPERATIONS		
SUBMITTED	HJB	1/18/96

EASTERN MUNICIPAL WATER DISTRICT
STANDARD DRAWING

AIR TEST DETAILS

REFERENCES:

SCALE: NO SCALE

DRAWN BY: K.E.R.

RECOMMENDED Chad Bashaw 1/19/96
DIRECTOR OF ENGINEERING — DATE

APPROVED [signature] 1/25/96
CHIEF ENGINEER — DATE

B-659

FILE ID: /USR/KARL/STANDARDS/B659.DGN

Xref: 29 Jun 18 09:40:20 1996 /usr/karl/dgn/b659.dgn

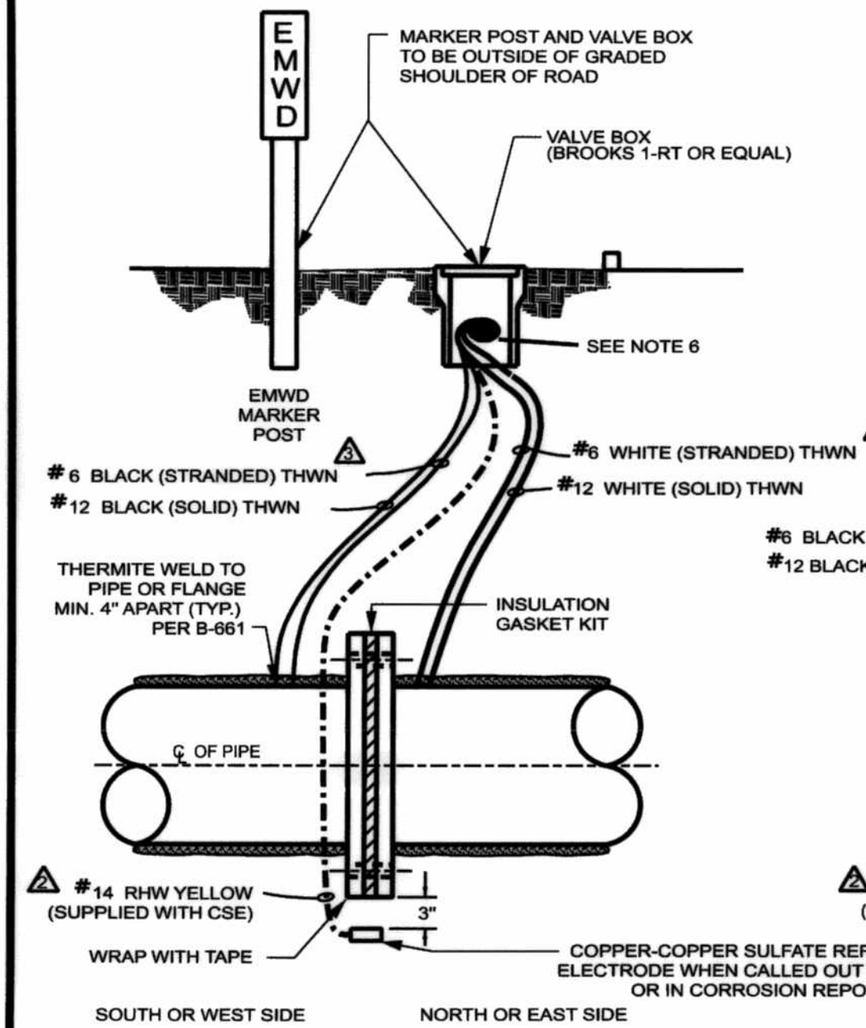

INSULATED JOINT TEST STATION

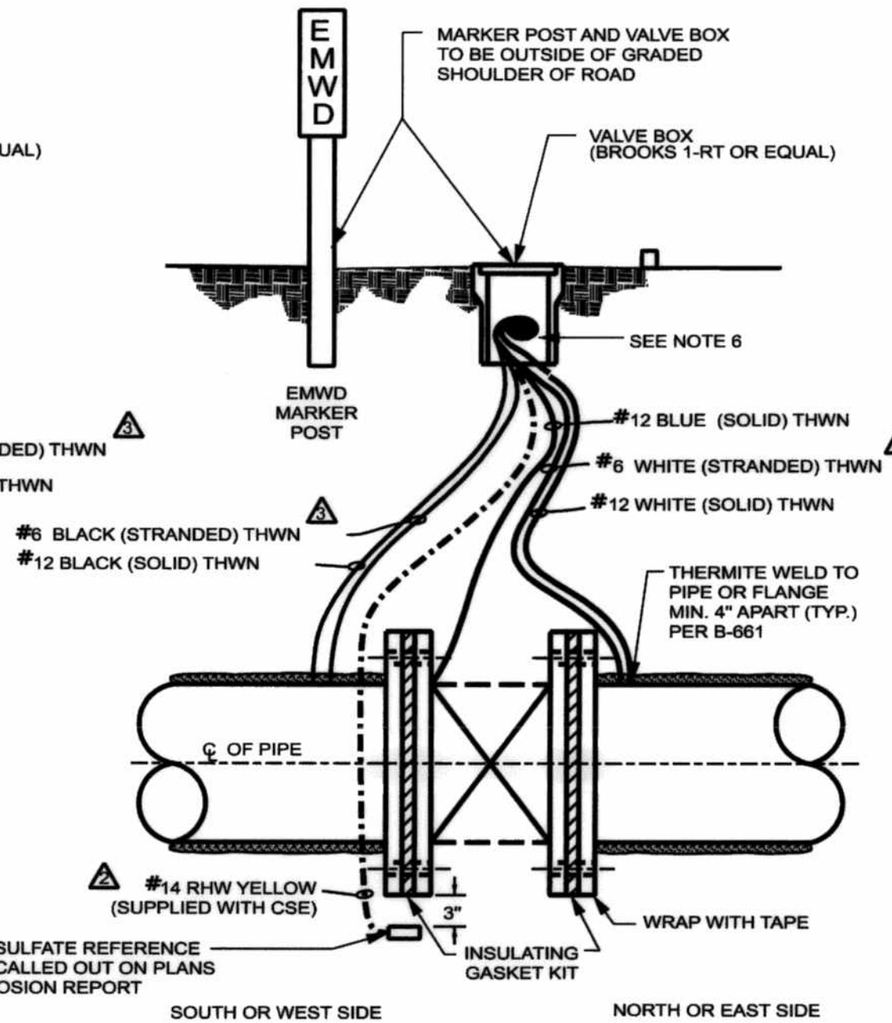

INSULATED JOINT AT VALVE TEST STATION

NOTES:

1. LEAD WIRES SHALL BE 3 FT DEEP THROUGH ROAD SHOULDER.
2. THE VALVE BOX SHALL BE LOCATED JUST OUTSIDE THE PROPERTY LINE (IN STREET R/W) EXCEPT AS OTHERWISE DIRECTED BY THE ENGINEER.
3. WHITE WIRES TO BE PLACED ON THE NORTH AND EAST SIDE OF INSULATED FLANGE OR VALVE.
4. PIPELINE SHALL BE ASSEMBLED IN TRENCH PRIOR TO THERMITE WELDING.
5. WIRE AND BONDED CONNECTIONS SHALL BE PROTECTED DURING FIELD MORTARING OF PIPE JOINTS.
6. TERMINATE ALL WIRES A MINIMUM OF ONE FOOT ABOVE GROUND LEVEL AND COIL EXCESS WIRE IN BOX.
7. SEE EMWD STANDARD SPECIFICATION SECTION 9810 "TAPE WRAP FOR INSULATED JOINTS" FOR MATERIALS AND INSTALLATION.
8. HMWPE WIRE INSULATION TO BE UL LISTED FOR U.S.E.
4. 9. FOR WIRES ABOVE GROUND, TAG INDIVIDUAL WIRES FOR IDENTIFICATION PURPOSES, FOR BURIED WIRES, PLACE MARKER TAPE.

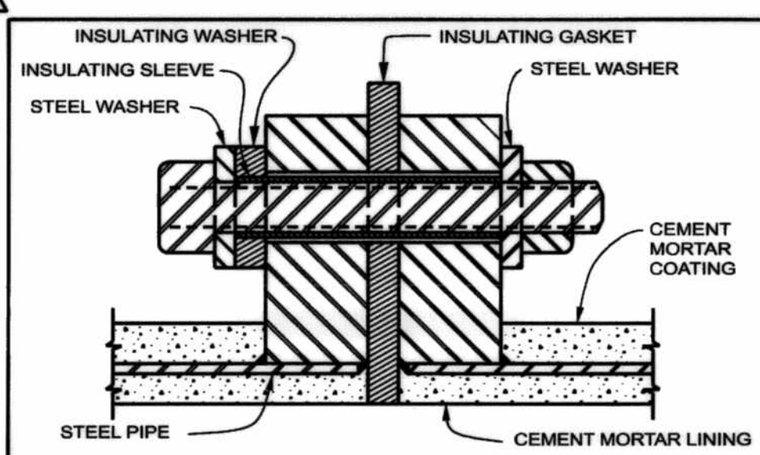

1. IF ANODES ARE INSTALLED, PLACE NON-INSULATED SIDE OF BOLT TOWARD ANODE.
2. DO NOT APPLY METALLIC OR OTHER NON-INSULATING PAINTS TO INSULATING PARTS OR OUTER EDGES OF FLANGES.
3. INSULATING SLEEVE TO BE 0.015" SHORTER THAN DISTANCE BETWEEN STEEL WASHERS WHEN BOLT IS FULLY TIGHTENED.
4. FOR PIPE 24" & LARGER, INSULATING WASHER TO BE "PYROX" OR OF EQUAL STRENGTH.
5. FLANGE INSULATION KIT MUST BE EMWD APPROVED AND MUST INCLUDE AN O-RING SEALING ELEMENT MANUFACTURED AS PART OF THE INSULATING GASKET.
6. FOR DISTRICT CONTRACT WORK: INSULATED FLANGED JOINT TO BE FACTORY ASSEMBLED WITHIN A PIPE SECTION AND TESTED, UNLESS OTHERWISE SPECIFIED.

INSULATED FLANGED JOINT DETAIL

REVISIONS					
NO.	DATE	INITIAL	DESCRIPTION	APP'D	DATE
1	12/11/96	KER	SUPERCEDES B-379 AND B-363	VJB	4/28/97
2	5/4/99	GR	REVISED #14 RHW COLOR	VJB	5/6/99
3	1/12/04	CM	REV. #6 BLACK & WHITE WIRE INSUL. TO THWN	VJB	1/12/04
4	8/31/07	RE	ADDED NOTE # 9	XM	12/18/07

APPROVALS		
	INITIAL	DATE
DESIGN	GLJ	1/23/97
CONSTRUCTION		
INSPECTION	JEW	4/23/97
OPERATIONS	LMc	1/28/97
SUBMITTED		

REFERENCES: B-363, B-379 & B-661
FILE I.D.: \kauai\eng\std dwg\b660.dgn
SCALE: NONE
DRAWN BY K.E.R.

EASTERN MUNICIPAL WATER DISTRICT

RECOMMENDED Michael G. Meyerpeter 1/24/97
PROJECT ENGINEER

EASTERN MUNICIPAL WATER DISTRICT
STANDARD DRAWING

TEST STATIONS: INSULATED JOINT AND INSULATED JOINT AT VALVE

APPROVED Charles J. Bachmann 4/25/97
ASST. GENERAL MANAGER OF ENGINEERING DATE

B-660

4

b660.dgn 12/18/2007 8:17:26 AM

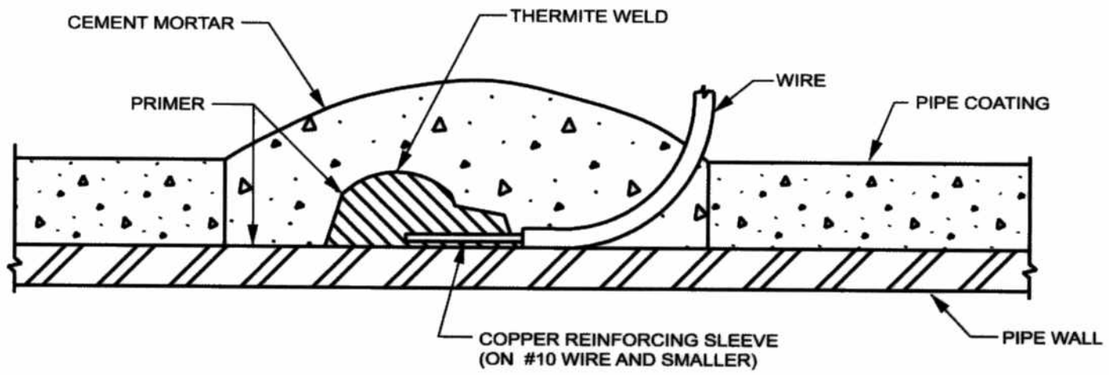

C.M.L.&C. PIPE

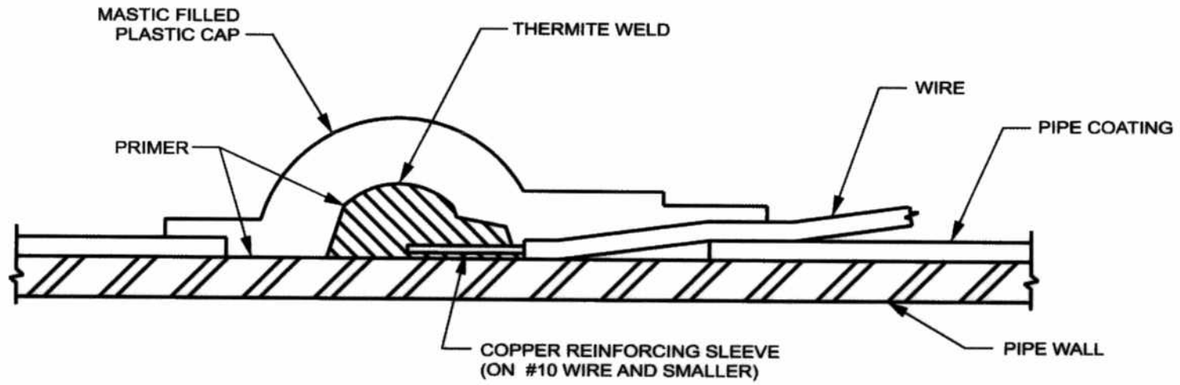

DIELECTRIC COATED PIPE

NOTES:

1. THERMITE WELD ALLOY SHALL BE SUITABLE FOR TYPE OF PIPE METAL (i.e., STEEL OR IRON.)
2. CLEAN PIPE TO BRIGHT METAL WITH FILE OR GRINDER.
3. WELD WIRE TO PIPE FOLLOWING WELD MANUFACTURER'S DIRECTIONS.
4. STRIKE SIDE OF WELD SOLIDLY WITH A 16 OZ. OR LARGER HAMMER TO TEST WELD.
5. REMOVE FLUX AND COAT WITH PRIMER.
6. RECOAT WITH MORTAR FOR CML&C PIPE AT JOINT ENCASE IN FIELD APPLIED MORTAR.
7. INSTALL MASTIC-FILLED PLASTIC CAP FOR DIELECTRIC COATED PIPE.
8. FOR WIRES ABOVE GROUND, TAG INDIVIDUAL WIRES FOR IDENTIFICATION PURPOSES, FOR BURIED WIRES, PLACE MARKER TAPE. (2)

REVISIONS

NO.	DATE	INITIAL	DESCRIPTION	APP'D	DATE
1	3/8/01	GR	ADDED NEW TITLE BLOCK AND FILE ID NO		
2	9/21/07	RE	ADDED NOTE # 8	JWM	12/18/07

REFERENCES:

FILE I.D.: \kauai\eng\std dwg\b661.dgn

SCALE: NONE

DRAWN BY K.E.R.

APPROVALS

	INITIAL	DATE
DESIGN	GLJ	1/23/97
CONSTRUCTION		
INSPECTION	JEW	4/23/97
OPERATIONS	LMc	1/28/97
SUBMITTED		

EASTERN MUNICIPAL WATER DISTRICT

RECOMMENDED Michael G. Meyerpeter 1/254/97
PROJECT MANAGER DATE

EASTERN MUNICIPAL WATER DISTRICT
STANDARD DRAWING

THERMITE WELD DETAILS

APPROVED Charles J. Bachmann 4/25/97
DIRECTOR OF ENGINEERING DATE

B-661

(2)

b661.dgn 12/4/2007 4:20:02 PM

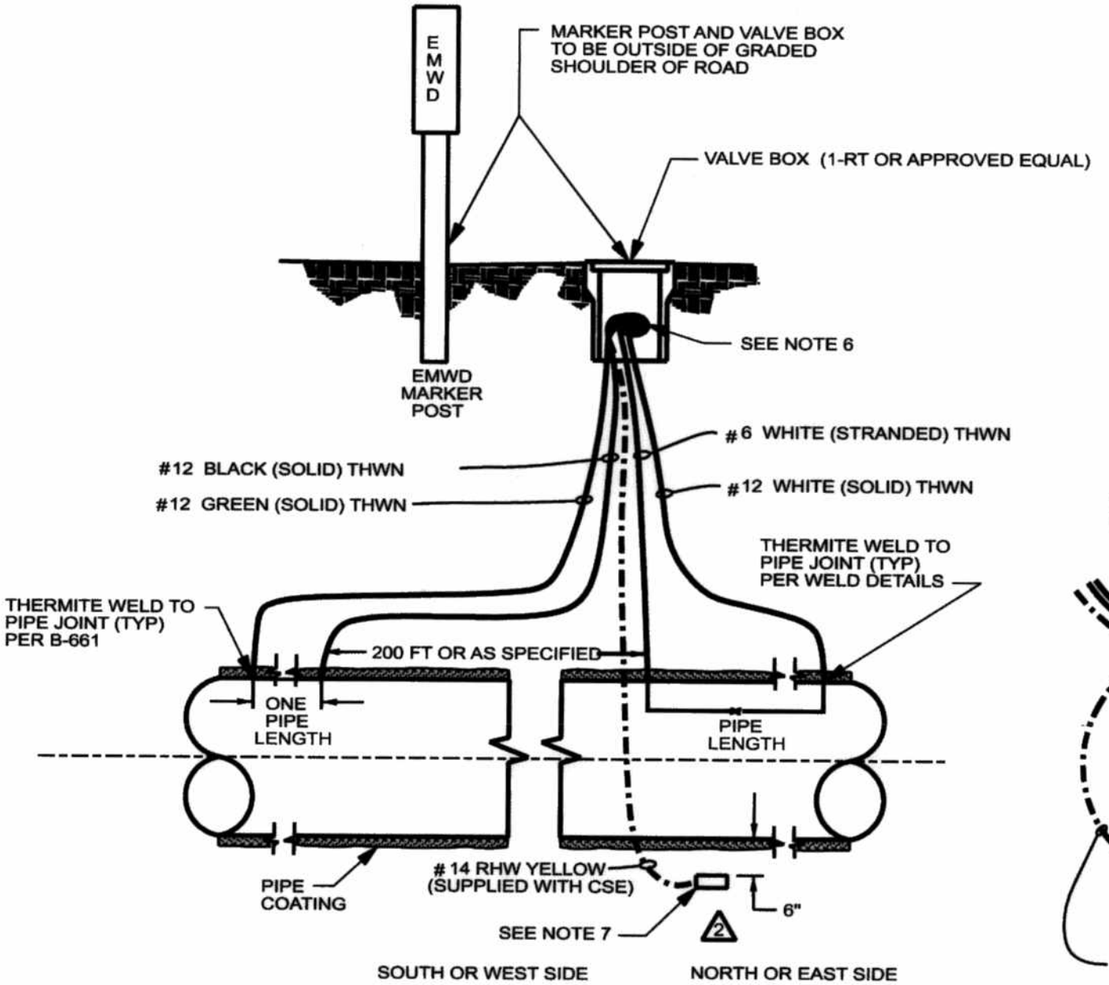

LINE CURRENT TEST STATION

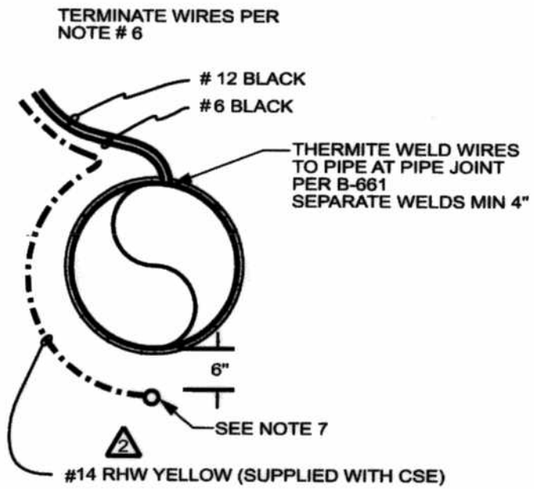

BASIC TEST STATION

NOTES:

1. LEAD WIRES SHALL BE 36" DEEP THROUGH ROAD SHOULDER AND 24" OTHERWISE.
2. THE VALVE BOX SHALL BE LOCATED JUST OUTSIDE THE PROPERTY LINE (IN STREET R/W) EXCEPT AS OTHERWISE DIRECTED BY THE ENGINEER.
3. WHITE WIRES SHALL ALWAYS BE PLACED BELOW AND ON THE NORTH AND EAST SIDE OF THE TEST STATION.
4. PIPELINE SHALL BE ASSEMBLED IN TRENCH PRIOR TO THERMITE WELDING.
5. WIRE AND BONDED CONNECTIONS SHALL BE PROTECTED DURING FIELD MORTARING OF PIPE JOINTS.
6. TERMINATE ALL WIRES A MINIMUM OF 1 FT ABOVE GROUND LEVEL AND COIL EXCESS WIRE IN BOX.
7. COPPER-COPPER SULFATE ELECTRODE (CSE) INSTALLED ONLY WHEN SPECIFIED ON PLANS.
3. 8. FOR WIRES ABOVE GROUND, TAG INDIVIDUAL WIRES FOR IDENTIFICATION PURPOSES, FOR BURIED WIRES, PLACE MARKER TAPE.

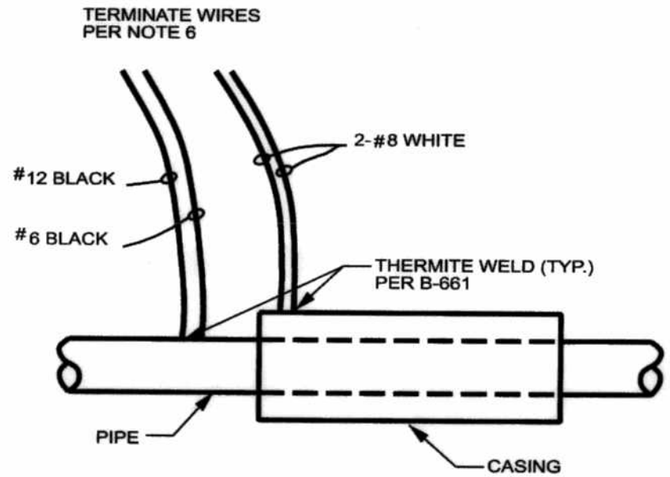

PIPE W/CASING TEST STATION

REVISIONS					
NO.	DATE	INITIAL	DESCRIPTION	APP'D	DATE
1	5/4/99	GR	SUPERCEDES B-582	VJB	5/6/99
2	5/4/99	GR	REVISED #14 RHW COLOR	VJB	5/6/99
3	10/29/07	RE	ADDED NOTE # 8	[illegible]	12/18/07

APPROVALS		
	INITIAL	DATE
DESIGN	GLJ	1/23/97
CONSTRUCTION		
INSPECTION	JEW	4/23/97
OPERATIONS	LMc	1/28/97
SUBMITTED		

REFERENCES: B-661

FILE I.D.: \kaual\eng\std dwg\B662.dgn

SCALE: NONE

DRAWN BY KER

EASTERN MUNICIPAL WATER DISTRICT

RECOMMENDED Michael G. Meyerpeter 1/24/97
PROJECT MANAGER DATE

EASTERN MUNICIPAL WATER DISTRICT

EASTERN MUNICIPAL WATER DISTRICT
STANDARD DRAWING

TEST STATIONS: LINE CURRENT, BASIC AND PIPE WITH CASING

APPROVED Charles J Bachmann 4/25/97
DIRECTOR OF ENGINEERING DATE

B-662

3

b662.dgn 12/4/2007 4:05:16 PM

TEE

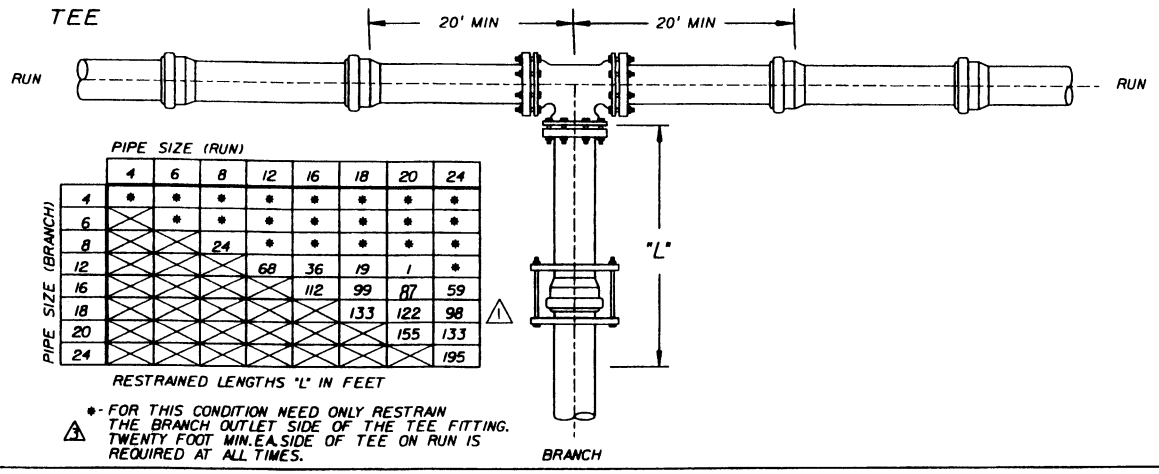

PIPE SIZE (RUN) / PIPE SIZE (BRANCH)

	4	6	8	12	16	18	20	24
4	*	*	*	*	*	*	*	*
6	X	*	*	*	*	*	*	*
8	X	X	24	*	*	*	*	*
12	X	X	X	68	36	19	1	*
16	X	X	X	X	112	99	87	59
18	X	X	X	X	X	133	122	98
20	X	X	X	X	X	X	155	133
24	X	X	X	X	X	X	X	195

RESTRAINED LENGTHS "L" IN FEET

⚠1 * - FOR THIS CONDITION NEED ONLY RESTRAIN THE BRANCH OUTLET SIDE OF THE TEE FITTING. TWENTY FOOT MIN. EA. SIDE OF TEE ON RUN IS REQUIRED AT ALL TIMES.

HORIZONTAL BEND

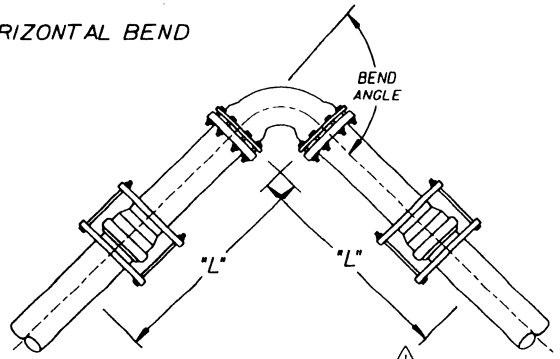

⚠1

BEND ANGLE \ PIPE SIZE	4	6	8	12	16	18	20	24
11.25°	2	3	4	6	8	9	10	11
22.5°	5	7	9	13	16	18	19	23
45°	10	14	19	26	34	37	40	47
90°	25	34	45	63	81	89	98	113

RESTRAINED LENGTHS "L" IN FEET

DEAD END/EACH SIDE OF VALVE

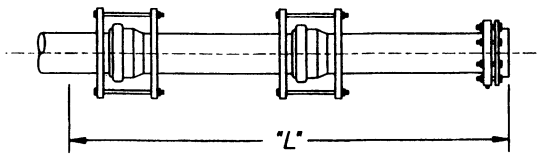

⚠1

PIPE SIZE	4	6	8	12	16	18	20	24
	59	84	110	156	202	223	245	287

RESTRAINED LENGTHS "L" IN FEET

VERTICAL BEND

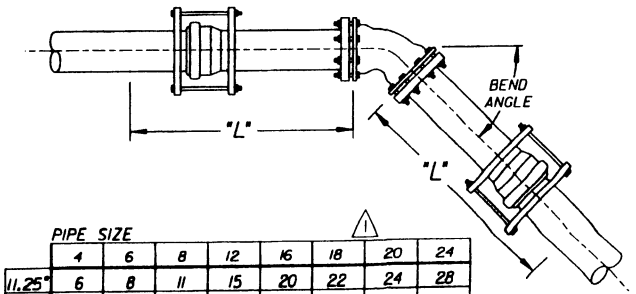

⚠1

BEND ANGLE \ PIPE SIZE	4	6	8	12	16	18	20	24
11.25°	6	8	11	15	20	22	24	28
22.5°	12	17	22	31	40	44	49	57
45°	25	35	46	65	84	92	102	119

RESTRAINED LENGTHS "L" IN FEET

RESTRAINT JOINT LENGTHS USAGE GENERAL NOTES

1. ALL JOINTS WITHIN LENGTH "L" MUST BE RESTRAINED.
2. FOR TEE RESTRAIN BOTH RUN-SIDE JOINTS AND INSTALL A FULL LENGTH OF PIPE ON EACH SIDE OF BRANCH.
3. FORTY-EIGHT (48) INCHES MINIMUM DEPTH OF COVER.
4. A SAFETY FACTOR OF 1.5.
5. SOIL TYPE ML (INORGANIC SILTS, VERY FINE SANDS, ROCK FLOUR, SILTY OR CLAYEY FINE SANDS) PER UNITED SOIL CLASSIFICATION ASTM D 2487.
   A. NO BEDDING IN GRANULAR MATERIAL.
   B. NO USE OF PHI = 0 PRINCIPAL.
6. PIPE BEDDING PER EMWD STANDARD DRAWINGS B-2868 AND B-408.
⚠1 7. TEST PRESSURE 225 PSI
8. IF ACTUAL CONDITIONS DIFFER FROM THOSE LISTED ABOVE OR THE REQUIRED RESTRAINED LENGTH CANNOT BE MET, THE RESTRAINED LENGTH SHALL BE DETERMINED BY THE DESIGN ENGINEER AND APPROVED BY THE DISTRICT ENGINEER.

REVISIONS

NO.	DATE	INITIAL	DESCRIPTION	APP'D	DATE
⚠1	10/99	RVD	REVISED RESTRAINED LENGTHS FOR PVC C-905 (16"-24"), REVISED NOTE 7	VJB	10/29/99
⚠2	5/17/00	GR	REVISED TITLE BLOCK	VJB	5/22/00
⚠3	3/6/03	CM	REVISED NOTE RE: TEE RESTRAIN LIMITS	VJB	10/15/03

APPROVALS

	INITIAL	DATE
DESIGN		
CONSTRUCTION		
INSPECTION	RPK	1/15/98
OPERATIONS		
SUBMITTED	VJB	1/15/98

EASTERN MUNICIPAL WATER DISTRICT

EASTERN MUNICIPAL WATER DISTRICT
STANDARD DRAWING

STANDARD RESTRAINT TEE, DEAD END, BEND FOR PVC C-900 & C-905

REFERENCES:

FILE I.D.: \\nlogra ap\eng\std dwgs\b663.dgn

SCALE: NONE

DRAWN BY KER/CBD

APPROVED Charles J. Bachmann 1/15/98
ASSISTANT GENERAL MANAGER ENGINEERING DATE

B-663 ⚠3

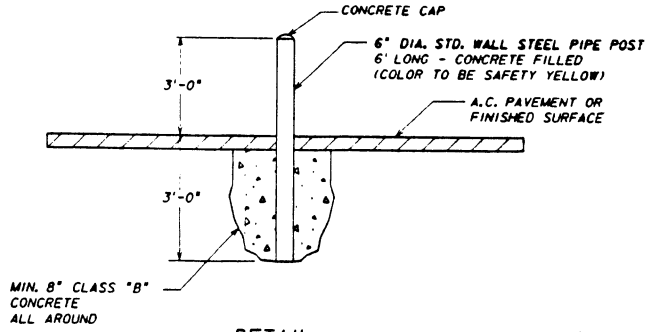

DETAIL

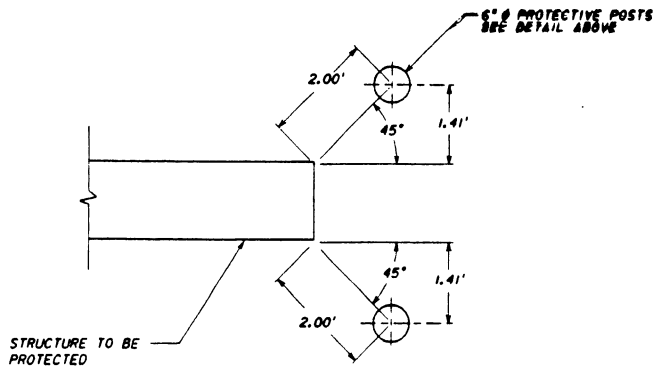

TYPICAL PLAN LOCATION

GUARD POSTS

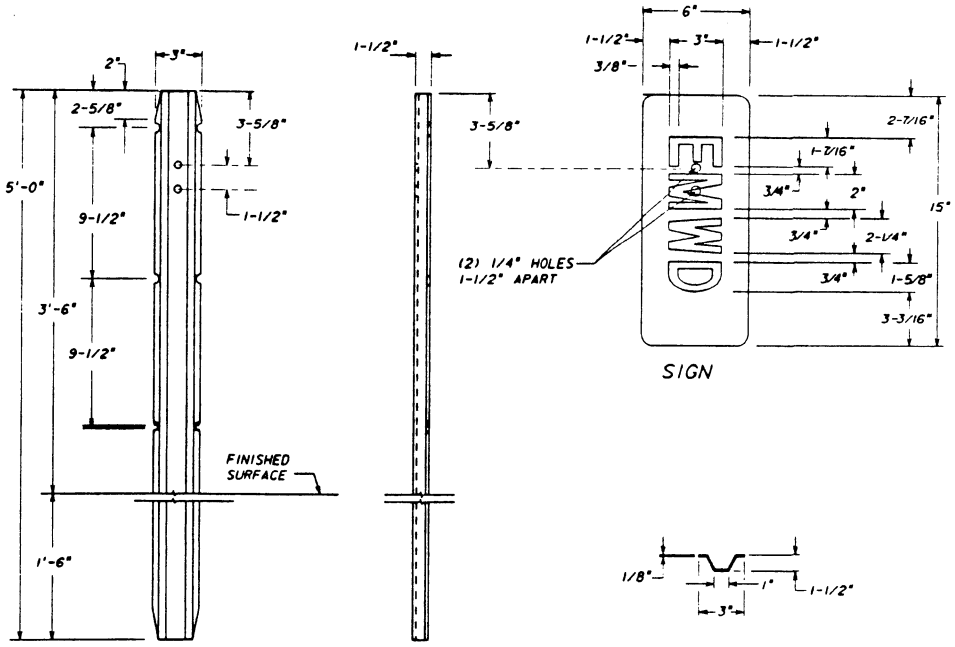

FRONT SIDE SIGN TOP

NOTES:

1. POST MATERIAL, 2.0 LBS PER FOOT; FINISH ON POST, GALVANIZED.
2. SIGN MATERIAL, .062 ALUMINUM; TO BE PAINTED WHITE WITH BLACK LETTERS.
3. SIGN TO BE PRE-PUNCHED FOR BOLT HOLES TO MATCH THOSE IN POST.
4. POST CAN BE DRIVEN.
5. SIGN TO BE ATTACHED WITH 2 - 2"X1/8" BOLT & NUT AFTER INSTALLATION OF POST.

5 FOOT STEEL MARKER POST

REVISIONS					
NO.	DATE	INITIAL	DESCRIPTION	APP'D	DATE
1	8/1/97	CRD	COMBINED A-498 AND A-504 REDRAWN ON CADD	[illegible]	12-19-00

APPROVALS		
	INITIAL	DATE
DESIGN		
CONSTRUCTION		
INSPECTION		
OPERATIONS		
SUBMITTED	KER	12/19/00

EASTERN MUNICIPAL WATER DISTRICT

EASTERN MUNICIPAL WATER DISTRICT
STANDARD DRAWING

GUARD AND MARKER POSTS

REFERENCES: SUPERCEDES A-498 & A-504
FILE I.D.: d_standards: b665.dgn

SCALE: NONE
DRAWN BY CRD

RECOMMENDED _____ DIRECTOR OF ENGINEERING DATE

APPROVED _____ ASSISTANT GENERAL MANAGER ENGINEERING 4/25/01 DATE

B-665

1

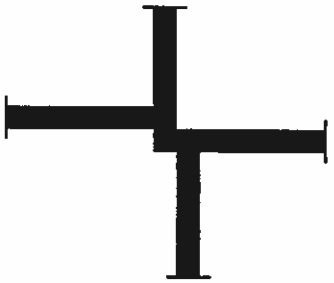

PLAN

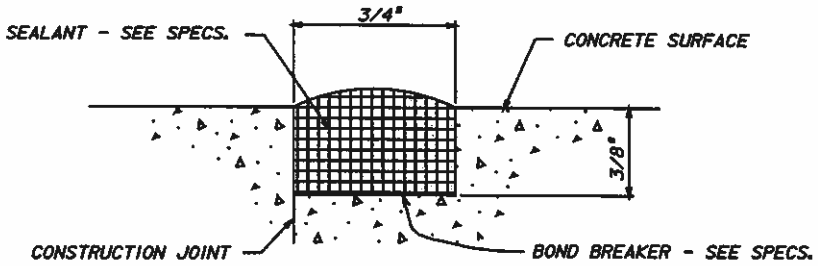

DETAIL

FORMED SEALANT GROOVE DETAIL

NOTE: AT CONTRACTORS OPTION GROOVES MAY CONTINUE STRAIGHT ACROSS CONSTRUCTION JOINT INTERSECTIONS OR BE STAGGERED AS SHOWN IN PLAN.

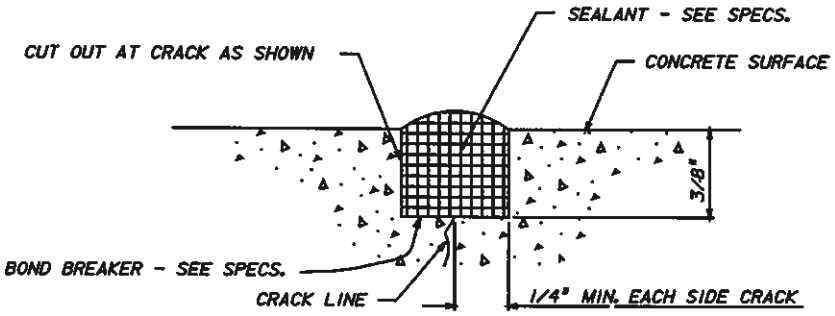

TYPICAL CRACK REPAIR DETAIL

NOTE: PRIOR TO FILLING STRUCTURE WITH WATER REPAIR ALL CRACKS IN FLOOR SLABS, WALLS, AND ROOF SLAB AS PER DETAIL ABOVE.

REVISIONS					
NO.	DATE	INITIAL	DESCRIPTION	APP'D	DATE
1	8/26/97	CRD	REDRAWN A-533 ON CAD	VJB	1/28/98
2	3/12/01	GR	REVISED FILE ID NO		

APPROVALS		
	INITIAL	DATE
DESIGN	JVS	3/3/87
CONSTRUCTION		
INSPECTION		
OPERATIONS		
SUBMITTED	LVM	4/8/87

EASTERN MUNICIPAL WATER DISTRICT

REFERENCES: SUPERCEDES A-533

FILE I.D.: m:\graphics/visio\maint\standard dwg\b-666.dgn

SCALE: NONE

DRAWN BY CRD

EASTERN MUNICIPAL WATER DISTRICT

EASTERN MUNICIPAL WATER DISTRICT
STANDARD DRAWING

FORMED SEALANT GROOVE DETAIL AND TYPICAL CRACK REPAIR

APPROVED James H. Bunts Jr. 4/8/87
ASSISTANT GENERAL MANAGER ENGINEERING DATE

B-666 A

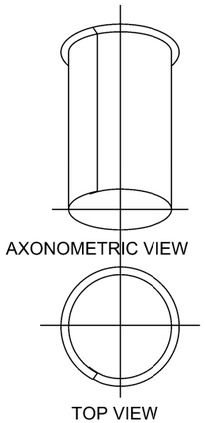

SLIP CAN DETAIL

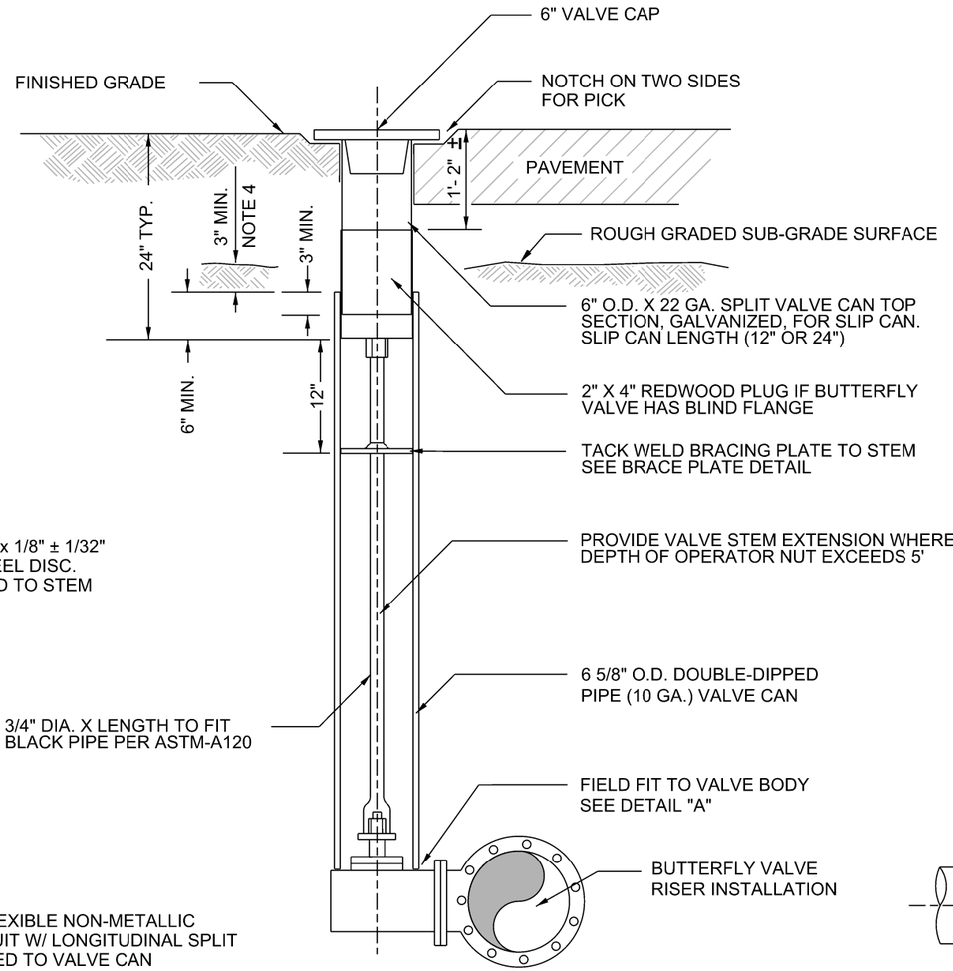

STANDARD INSTALLATION

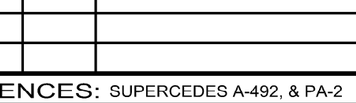

BRACING PLATE DETAIL

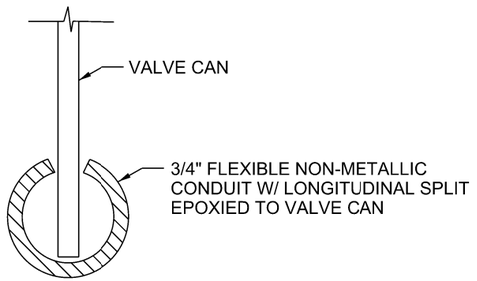

DETAIL "A"

NOTES

1. CONTRACTOR SHALL RAISE SLIP CAN TO GRADE AFTER STREET IS PAVED, WHERE PAVING IS PROPOSED.
2. IN UNPAVED AREAS, CONTRACTOR SHALL LEAVE CAP AND SLIP CAN 18" BELOW FINISH GRADE. (I.E. GRADED SHOULDERS).
3. IN NEW SUBDIVISIONS WHERE IT IS SPECIFICALLY GIVEN TO OTHERS (AS SPECIFIED) TO RAISE CAP AND CAN TO FINISH GRADE UPON COMPLETION OF PAVING. WATER CONTRACTOR SHALL FURNISH STEM EXTENSION, SLIP CAN AND CAP TO DISTRICT STORAGE YARD, AND LEAVE VALVE CANS PROPERLY COVERED WITH 2"x8"x8" REDWOOD PLATE.
4. SET TOP OF TRAFFIC COVER SUFFICIENTLY BELOW ROUGH GRADED SUB-GRADE TO AVOID DAMAGE DURING FINE GRADING AND SCARIFYING OPERATION.
5. DOMESTIC WATER INSTALLATION: VALVE CAP TO BE PAINTED SAFETY PRECAUTION BLUE ENAMEL AND PRIMER, AS APPROVED, AND MARKED "WATER". RECYCLED WATER INSTALLATIONS: VALVE CAP LID TO BE PAINTED PURPLE AND MARKED "RECLAIMED".

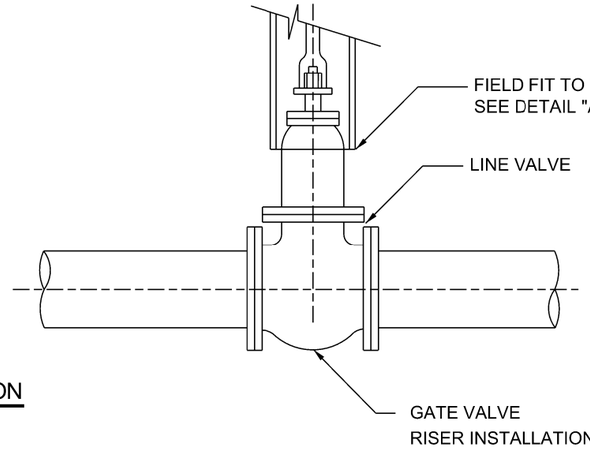

POTABLE WATER

RECYCLED WATER

BROOKS 4-TT OR APPROVED EQUAL

REVISIONS					
NO.	DATE	INITIAL	DESCRIPTION	APP'D	DATE

APPROVALS		
	INITIAL	DATE
DESIGN		
MAINTENANCE	MJ	11/10/14
INSPECTION	CD	11/3/14
OPERATIONS	KG	10/30/14
SUBMITTED	AGA	10/30/14

EASTERN MUNICIPAL WATER DISTRICT

EASTERN MUNICIPAL WATER DISTRICT

EASTERN MUNICIPAL WATER DISTRICT
STANDARD DRAWING

VALVE CAP & RISER DETAIL

REFERENCES: SUPERCEDES A-492, & PA-2

FILE I.D.: \kauai\eng\std dwgs\B-668.dgn

SCALE: NONE

DRAWN BY: GS

RECOMMENDED Joe Mouawad 11/10/2014
DIRECTOR OF ENGINEERING DATE

APPROVED Charlie Bachmann 11/12/2014
ASSISTANT GENERAL MANGER DATE

B-668

REGULATOR TABLE

MAIN REGULATOR NO. 1 (SIZE)	BY-PASS REGULATOR NO. 10 (SIZE)
4"	2" Direct-Acting Reg.
6"	2" Direct-Acting Reg.

PRESSURE REGULATOR

SIZE	RECOMMENDED FLOW (HEAD LOSS VARIES)
2"	15 GPM - 250 GPM
4"	90 GPM - 800 GPM
6"	175 GPM - 1800 GPM

MATERIAL LIST (ALL MATERIALS TO BE APPROVED BY EMWD)

1	1 EA	FLGD ANGLE PRESSURE REGULATOR W/(4) FOUR-PORT BONNET
2	2 EA	F x VICTAULIC SPOOL (CUT TO FIT)
3	1 EA	VICTAULIC COUPLING
4	2 EA	F x F 90° ELBOW
5	3 EA	F x F BUTTERFLY VALVE
6	2 EA	FLGD TEE (RUN SIZE SAME AS MAIN REGULATOR NO.1) x 4" (BRANCH) W/COMPANION FLANGE (SIZE AS REQUIRED)
7	2 EA	STAINLESS STEEL BALL VALVE W/CLOSE NIPPLE (SIZE AS REQUIRED)
8	2 EA	COPPER OR BRASS PIPE (SIZE AS REQUIRED)
9	2 EA	45° COPPER OR BRASS ELBOW W/CLOSE NIPPLE (SIZE AS REQUIRED)
10	1 EA	THREADED GLOBE DIRECT-ACTING PRESSURE REGULATOR W/UNION (SIZE AS REQUIRED)
11	2 EA	F x F CMLSC STEEL OR DI. PIPE (MIN 8" I.D.)
12	2 EA	F x F REDUCER (SIZE AS REQUIRED)
13	2 EA	F x F CMLSC STEEL OR DI. PIPE SPOOL (SIZED AS REG. NO. 1)
14	---	#4 REBAR GR 60 12" O.C. EA. WAY
15	---	PREFORMED EXPANSION PAPER PER ASTM 1751
16	1 EA	CONCRETE SLAB (LENGTH= 24" LARGER THAN O.D. OF RISER PIPE WIDTH= 24" LARGER THAN O.D. OF RISER PIPE)

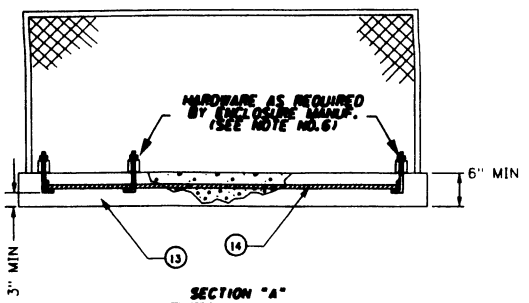

SECTION "A"

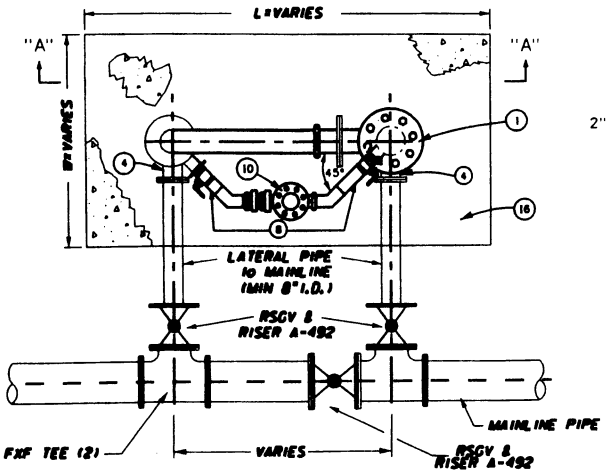

PLAN VIEW

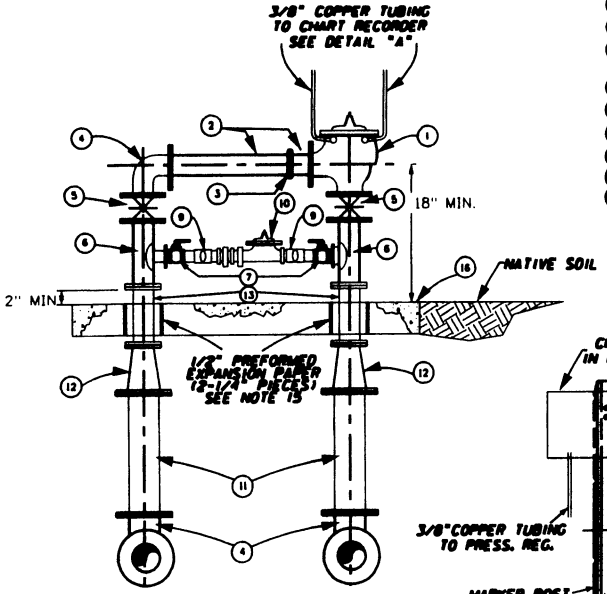

ELEVATION VIEW

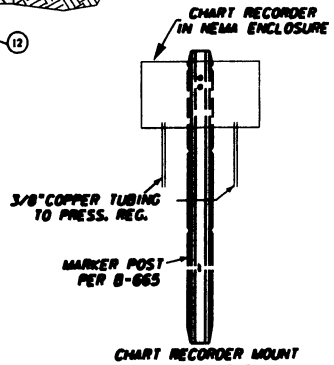

CHART RECORDER MOUNT DETAIL "A"

NOTES

1. PRESSURE REGULATOR SHALL BE MIN. 18" ABOVE FINISH GRADE.
2. BELOW GROUND INSTALLATION OF PRESS. REG. TO BE ALLOWED ONLY WHEN ABOVE GROUND ASSEMBLY IS NOT PERMITTED BY THE GOVERNING AGENCY.
3. IN AREAS PRONE TO FREEZING, BYPASS PIPING SHALL BE WRAPPED WITH INSULATING TAPE.
4. ALL CMLSC PIPE TO MEET EMWD SPECIFICATION 15061.
5. TEES OR CONNECTIONS SHALL NOT BE ALLOWED BETWEEN EMWD RSGV AND PRESSURE REGULATOR.
6. ENCLOSURE MANUFACTURERS, OR APPROVED EQUAL: 1) BACKFLOW PREVENTION DEVICE ENCLOSURE, PHOENIX, AZ. 2) LE MEUR WELDING & MANUFACTURING, WILMINGTON, CA.
7. EMWD O&M MAY REQUIRE A VERTICAL FLOW METER ON INLET PIPING. INSTALL AN EQUAL LENGTH SPOOL ON OUTLET PIPING.
8. EMWD O&M MAY REQUIRE A CHART RECORDER INSTALLED W/COPPER TUBING TO MAIN PRESS. REG. BODY PORTS. PLACED INSIDE NEMA ENCLOSURE. EXACT LOCATION TO BE DETERMINED IN THE FIELD.

REVISIONS

NO.	DATE	INITIAL	DESCRIPTION	APP'D	DATE

APPROVALS

	INITIAL	DATE
DESIGN	CM	7/14/05
CONSTRUCTION	—	—
INSPECTION	CD	7/14/05
OPERATIONS	K.G.	7/15/05
SUBMITTED	CM	7/18/05

REFERENCES:

FILE I.D.: \\aud\eng\stddrwgs\b932.dgn

SCALE: NONE

DRAWN BY CM

EASTERN MUNICIPAL WATER DISTRICT

EASTERN MUNICIPAL WATER DISTRICT

STANDARD DRAWING

4" & 6" PRESSURE REGULATOR ABOVE GROUND INSTALLATION

APPROVED _____ ASST. GENERAL MANAGER ENGINEERING 7/18/05 DATE

B-932

REGULATOR TABLE

MAIN REGULATOR NO. 1 (SIZE)	BYPASS REGULATOR NO. 10 (SIZE)
8"	4" Direct-Acting Reg.

BYPASS REGULATOR NO. 17 (SIZE)	2" Direct-Acting Reg.

PRESSURE REGULATOR

SIZE	RECOMMENDED FLOW (HEAD LOSS VARIES)
2"	15 GPM - 210 GPM
4"	50 GPM - 800 GPM
6"	115 GPM - 1800 GPM
8"	200 GPM - 3100 GPM

MATERIAL LIST (ALL MATERIALS TO BE APPROVED BY EMWD)

1	1 EA	FLGD ANGLE PRESSURE REGULATOR W/(4) FOUR-PORT BONNET
2	2 EA	F X VICTAULIC SPOOL (CUT TO FIT)
3	1 EA	VICTAULIC COUPLING
4	2 EA	F X F 90° ELBOW (MIN 8" LD.)
5	3 EA	F X F BUTTERFLY VALVE
6	2 EA	8" X 4" FLGD TEE W/4" COMPANION FLANGE.
7	4 EA	STAINLESS STEEL BALL VALVE W/CLOSE NIPPLE (SIZE AS REQUIRED)
8	2 EA	COPPER OR BRASS PIPE (SIZE AS REQUIRED)
9	4 EA	45° COPPER OR BRASS ELBOW W/CLOSE NIPPLE (SIZE AS REQUIRED)
10	1 EA	4" THREADED GLOBE DIRECT-ACTING PRESSURE REGULATOR W/UNION
11	2 EA	F X F CML&C STEEL OR D.I. PIPE (MIN 8" LD.)
12	2 EA	(1) X 8" FLGD REDUCER, IF REQUIRED
13	2 EA	8" F X F CML&C STEEL OR D.I. PIPE SPOOL
14	---	#4 REBAR GR 60 12" O.C. EA WAY
15	---	PREFORMED EXPANSION PAPER PER ASTM #91
16	1 EA	CONCRETE SLAB (LENGTH= 24" LARGER THAN O.D. OF RISER PIPE WIDTH= 24" LARGER THAN O.D. OF RISER PIPE)
17	1 EA	2" THREADED GLOBE DIRECT-ACTING PRESSURE REGULATOR W/UNION
18	2 EA	8" X 4" FLGD TEE W/4" X 2" COMPANION FLANGE

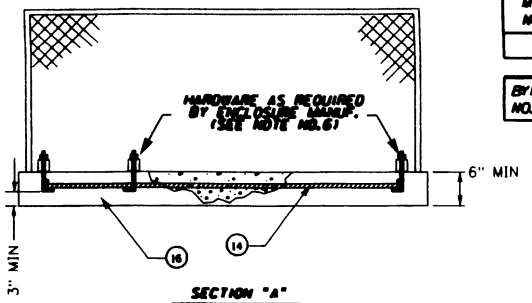

SECTION "A"

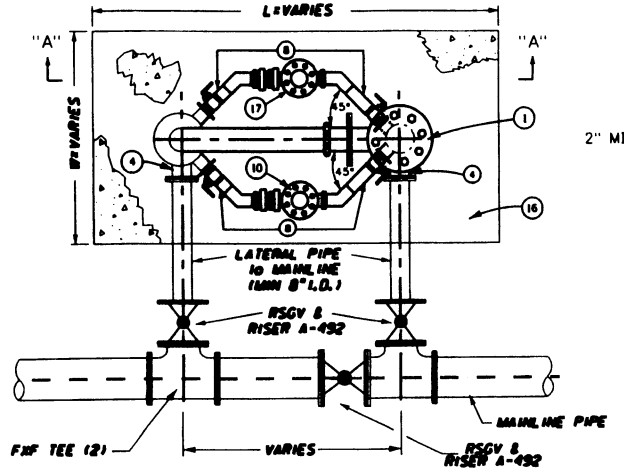

PLAN VIEW

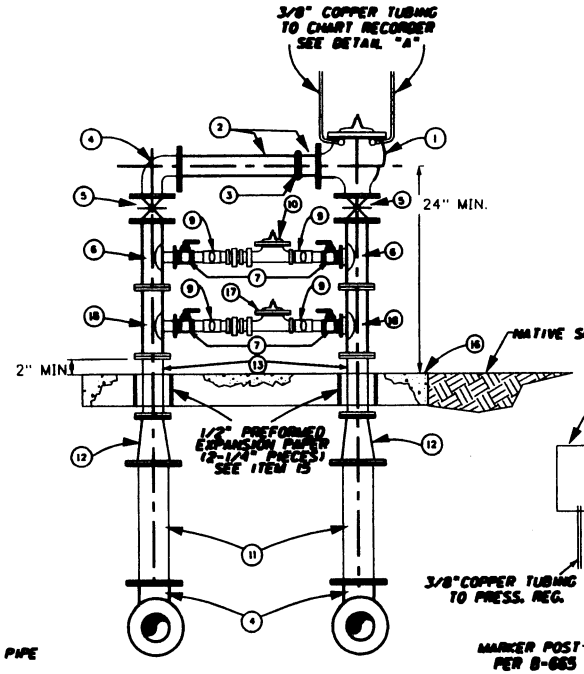

ELEVATION VIEW

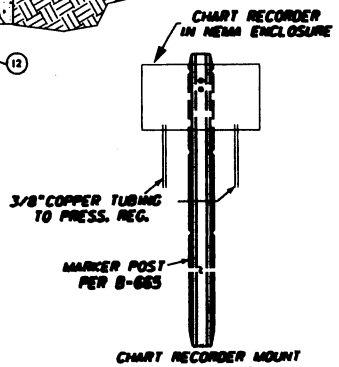

CHART RECORDER MOUNT DETAIL "A"

NOTES

1. PRESSURE REGULATOR SHALL BE MIN. 24" ABOVE FINISH GRADE.
2. BELOW GROUND INSTALLATION OF PRESS. REG. TO BE ALLOWED ONLY WHEN ABOVE GROUND ASSEMBLY IS NOT PERMITTED BY THE GOVERNING AGENCY.
3. IN AREAS PRONE TO FREEZING, BYPASS PIPING SHALL BE WRAPPED WITH INSULATING TAPE.
4. ALL CML&C PIPE TO MEET EMWD SPECIFICATION 15064.
5. TEES OR CONNECTIONS SHALL NOT BE ALLOWED BETWEEN EMWD RSGV AND PRESSURE REGULATOR.
6. ENCLOSURE MANUFACTURERS, OR APPROVED EQUAL:
   1) BACKFLOW PREVENTION DEVICE ENCLOSURE, PHOENIX, AZ.
   2) LE MEUR WELDING & MANUFACTURING, WILMINGTON, CA.
7. EMWD O&M MAY REQUIRE A VERTICAL FLOW METER ON INLET PIPING. INSTALL AN EQUAL LENGTH SPOOL ON OUTLET PIPING.
8. EMWD O&M MAY REQUIRE A CHART RECORDER INSTALLED W/COPPER TUBING TO MAIN PRESS. REG. BODY PORTS. PLACED INSIDE NEMA ENCLOSURE. EXACT LOCATION TO BE DETERMINED IN THE FIELD.

REVISIONS

NO.	DATE	INITIAL	DESCRIPTION	APP'D	DATE

APPROVALS

	INITIAL	DATE
DESIGN	CM	2/14/05
CONSTRUCTION	—	—
INSPECTION	CD	7/14/05
OPERATIONS	M.G.	7/12/05
SUBMITTED	CM	7/18/05

REFERENCES:

FILE I.D.: \\aud\eng\stddrwgs\b933.dgn

SCALE:

DRAWN BY CM

EASTERN MUNICIPAL WATER DISTRICT

EASTERN MUNICIPAL WATER DISTRICT

STANDARD DRAWING

8" PRESSURE REGULATOR ABOVE GROUND INSTALLATION

APPROVED _____ ASST. GENERAL MANAGER ENGINEERING 7/18/05 DATE

B-933

NEW B-933.dgn 07/13/2005 06:44:16 PM

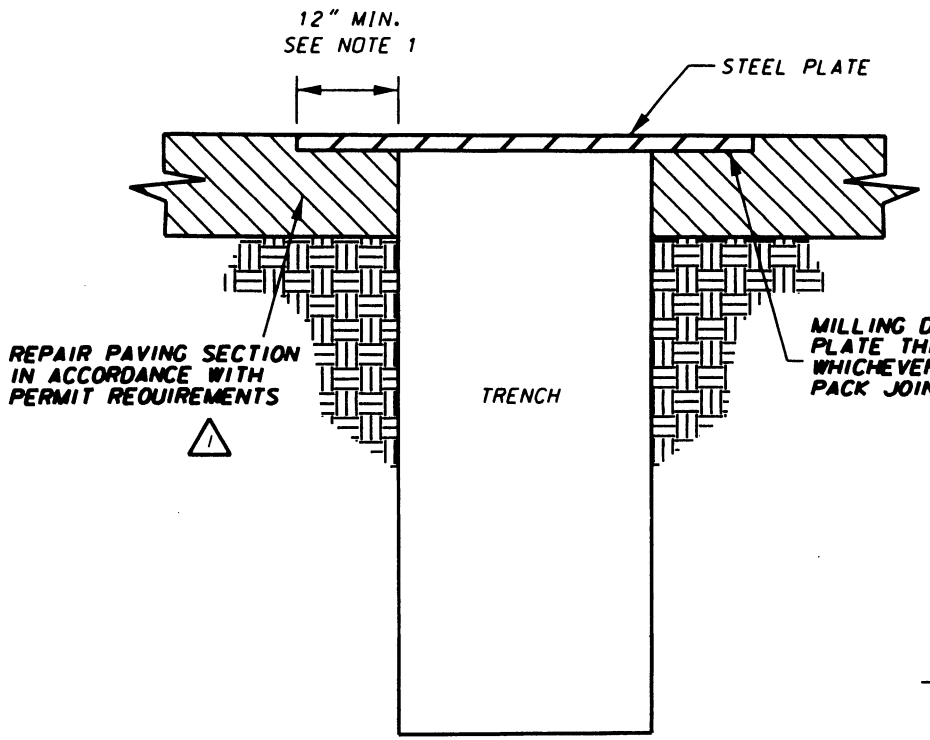

NOTES:

1. THE CONTRACTOR SHALL PROVIDE A MINIMUM 12" LAP OF STEEL PLATE ON EACH SIDE OF TRENCH TO ASSURE NO SLIPPING OF PLATE OR COLLAPSING OF TRENCH WALL. WHERE 12" LAP CANNOT BE MET, ENGINEER DESIGN REQUIRED.
2. MULTIPLE PLATES MUST BE TACK WELDED AS NEEDED TO SECURE PLATES, 6" MIN.
3. ALL PLATES MUST MEET REQUIRED TRAFFIC LOADS.

TYPICAL TRENCH PLATE DETAIL

N.T.S.

TO BE IMPLEMENTED ON ALL EMWD PROJECTS

REVISIONS					
NO.	DATE	INITIAL	DESCRIPTION	APP'D	DATE
1	8/25/05	CM	CHANGE FONT OF TEXT	VJB	8/24/05

APPROVALS		
	INITIAL	DATE
DESIGN	CM	8/17/05
CONSTRUCTION		
INSPECTION	CD	8/17/05
OPERATIONS		
SUBMITTED	VJB	8/17/05

EASTERN MUNICIPAL WATER DISTRICT

EASTERN MUNICIPAL WATER DISTRICT STANDARD DRAWING

RECESSED TRENCH PLATE DETAIL

REFERENCES:

FILE I.D.: \cad\engineering\stddwgs\b934.dgn

SCALE: NTS

DRAWN BY KER

APPROVED C.J. Bachmann 8/24/05
ASST. GENERAL MANAGER, ENGINEERING DATE

B-934 1

NewB-934Trench Plate.dgn 08/25/2005 01:01:08 PM

COPPER TUBE INSTALLATION

1" IRON PIPE SIZE
NOT TO SCALE

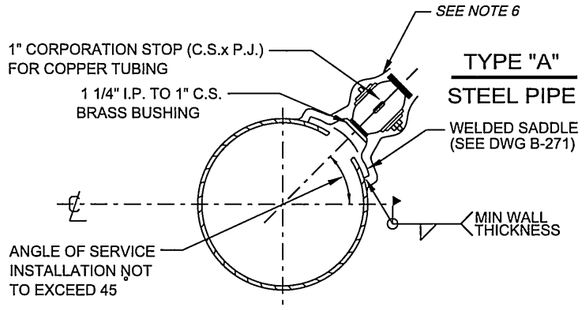

TYPE "A"
STEEL PIPE

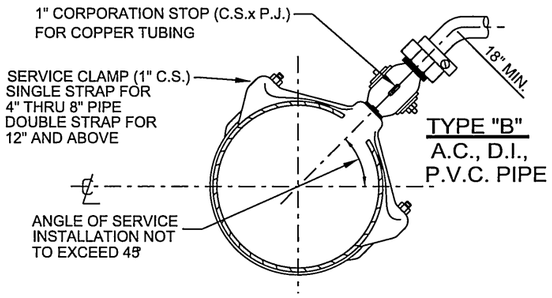

TYPE "B"
A.C., D.I., P.V.C. PIPE

GENERAL NOTES (1)

1. WATER SAMPLE STATION BODY AND 1" FLUSH VALVE ASSEMBLY SHALL BE PER AMERICAN MACHINE AND CONVEYOR CORP. MOD. EZ-01F 44 PC PAINT: WATER SAMPLE STATION BODY ; POWDER COATED GREEN RAL-6016 PER MANUF.
2. METER BOX SHALL BE EMWD APPROVED 12" x 20" COMPLETE WITH COVER.
3. ALL FITTINGS INCLUDING THE CORPORATION STOP AND GATE VALVE SHALL :
   A. BE MADE OF BRASS OR BRONZE ;
   B. BE OF THE BANDED PATTERN ;
   C. BE DESIGNED FOR A MIN OF 175 PSI (COLD) WATER WORKING PRESS.
4. PRESSURE TEST PER EMWD SPECIFICATIONS.
5. ALL LISTED MATERIALS TO BE PER EMWD APPROVED MATERIAL LIST.
6. CORPORATION STOP AND FITTINGS AT THE PIPELINE SHALL BE PRIMED AND WRAPPED WITH APPROVED COAL TAR RESIN TAPE.
7. ALL SERVICE PIPE AND TUBING SHALL BE LAID ON A CONSTANT SLOPE UP FROM THE WATER MAIN TO THE SAMPLER. NO DIPS OR POCKETS WILL BE PERMITTED, 36" COVER ATGAS MAIN CROSSINGS.
8. THREAD NOTATION SHOWN THUS :
   IP = IRON PIPE THREAD
   CS = CORPORATION STOP (MUELLER) THREAD
   PJ = PACK JOINT
9. INSTALL METER BOX DIRECTLY ADJACENT TO THE CONCRETE PAD WITH (2) 1" QTR BEND (CTS x PJ x MIP), 1" BALL VALVE ASSY W/ 3-1/4" LONG HANDLE & LOCK EARS, AND 1" MIP RED BRASS NIPPLE, LENGTH AS REQUIRED.

PLACEMENT OF SAMPLE STATION (2)

A. WATER SAMPLE STATIONS TO BE PLACED ON LOT LINES.
B. WHEN NONE OF THE BELOW PLACEMENT CONDITIONS EXIST SUBMIT TO EMWD ENGINEER FOR APPROVAL.

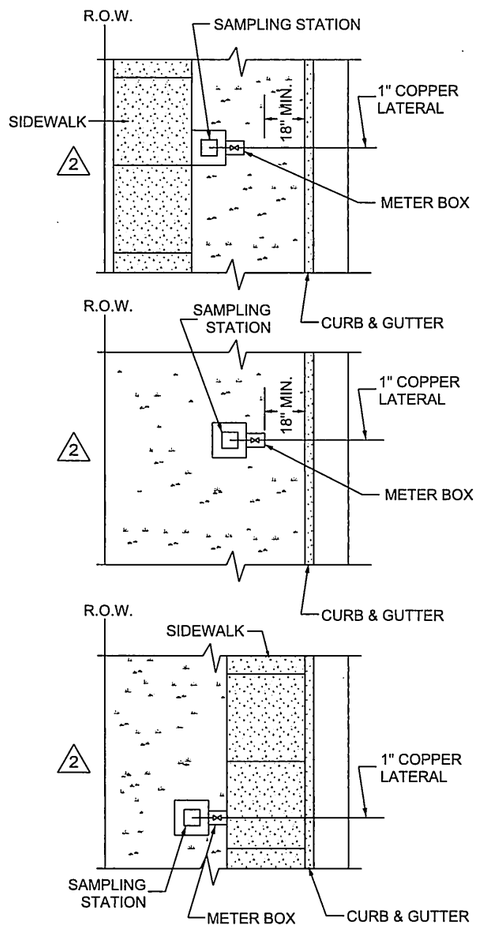

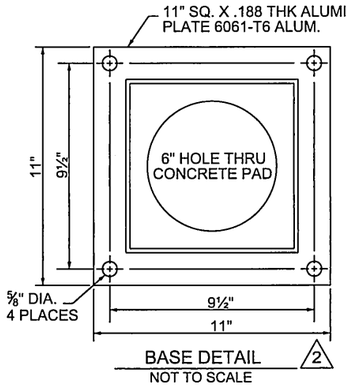

BASE DETAIL (2)
NOT TO SCALE

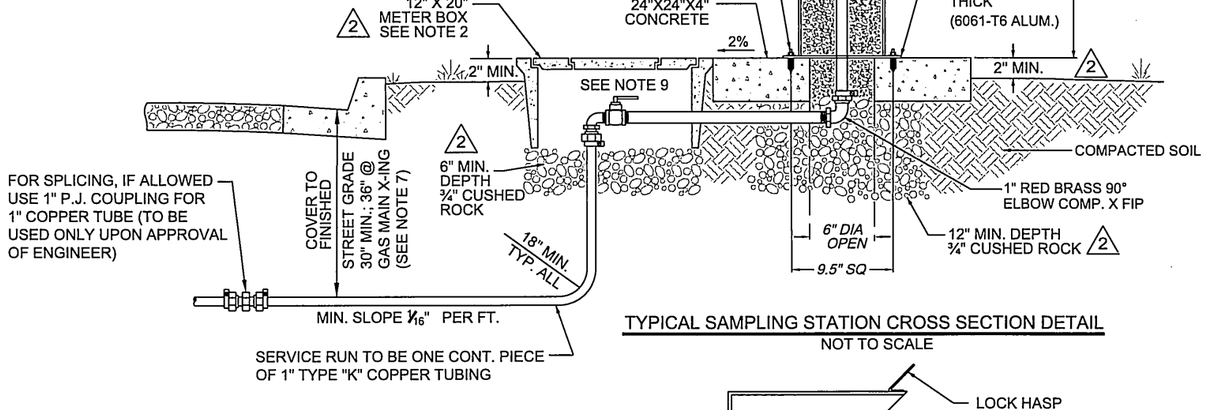

TYPICAL SAMPLING STATION CROSS SECTION DETAIL
NOT TO SCALE

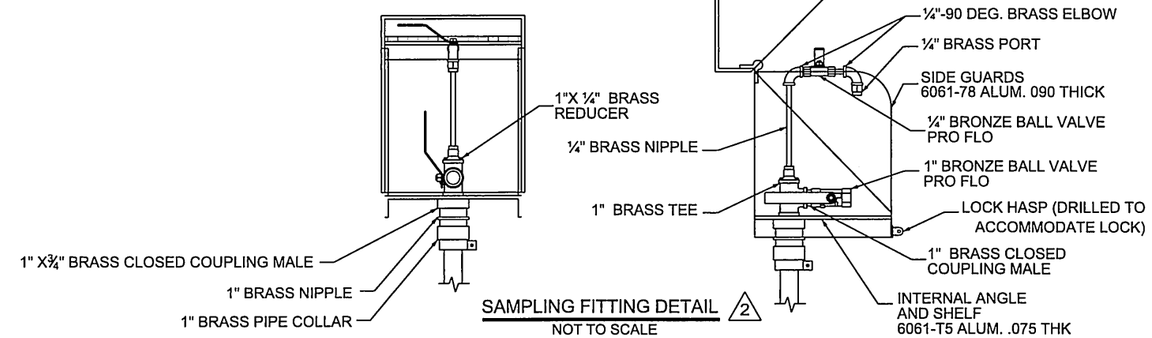

SAMPLING FITTING DETAIL (2)
NOT TO SCALE

REVISIONS						APPROVALS		
NO.	DATE	INITIAL	DESCRIPTION	APP'D	DATE		INITIAL	DATE
(2)	10/31/13	GS	ADDED METER BOX, FITTING & PLACEMENT DETAILS, NOTE 9, GRAVEL, REMOVED PLACEMENT NOTES, & VALVE BOX	AGA	10/31/13	INSPECTIONS	CD	10/7/05
						OPERATIONS	KG	10/7/05
(1)	7/14/11	GS	REVISED NOTE NO. 1 & VALVE ASSEMBLY	SMM	7/22/11	SUBMITTED	VJB	10/10/05

REFERENCES:
FILE I.D.: \kauai\eng\stddrwgs\B-935.dgn

SCALE: NONE
DRAWN BY: GS

EASTERN MUNICIPAL WATER DISTRICT

RECOMMENDED _____ DIRECTOR OF ENGINEERING 10-31-13 DATE

EASTERN MUNICIPAL WATER DISTRICT
RIVERSIDE COUNTY, CALIFORNIA

POTABLE WATER SAMPLE STATION

APPROVED Charlie Bachmann ASST. GENERAL MANAGER ENGINEERING 10/11/05 DATE

B-935 (2)

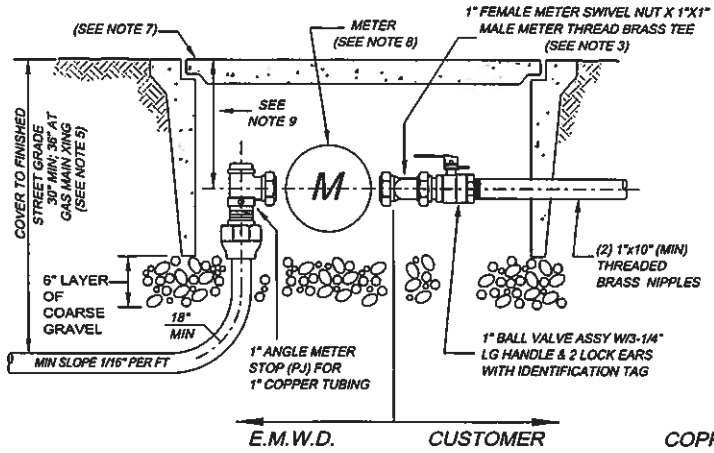

COPPER TUBING INSTALLATION

1" IRON PIPE SIZE
(NOT TO SCALE)

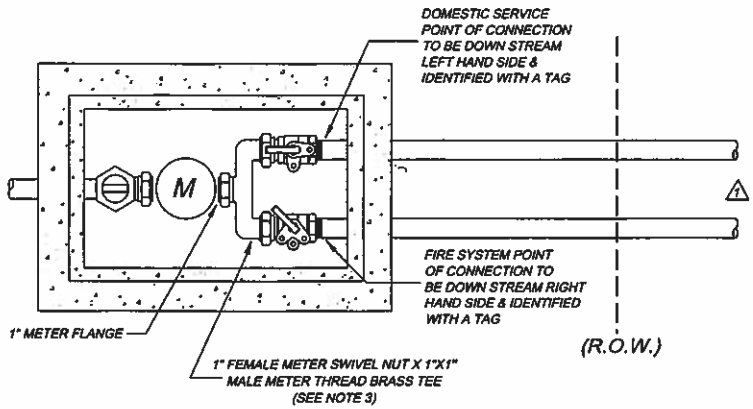

PLACEMENT OF METER BOX

A. PLACE FRONT EDGE OF METER BOX 6" MAX BEHIND EXISTING OR PROPOSED 6' OR 8' SIDEWALKS.

B. WHEN PROPOSED OR EXISTING SIDEWALK IS 12' WIDE PLACE FRONT EDGE OF BOX 6" MAX BEHIND CURB USING APPROPRIATE BOX (SEE NOTE 10).

C. WHEN NO SIDEWALK IS PROPOSED, PLACE FRONT EDGE OF BOX 6.5' BEHIND CURB FACE.

D. WHEN NO CURBS ARE EXISTING OR TO BE INSTALLED UPON COMPLETION OF THE WATER SYSTEM, PLACE BACK EDGE OF METER BOX ON PROPERTY LINE.

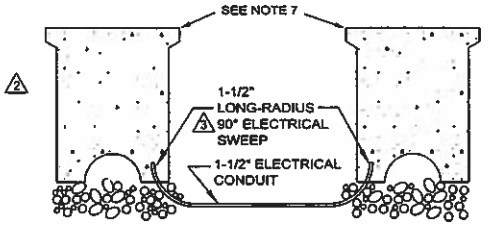

GENERAL NOTES 1

1. ALL FITTINGS BETWEEN AND INCLUDING CORPORATION STOP AND GATE VALVE SHALL:
   A. BE MADE OF BRASS OR BRONZE;
   B. BE OF THE BANDED PATTERN;
   C. BE DESIGNED FOR A MIN OF 175 PSI (COLD WATER) WORKING PRESSURE.
   D. BE LEAD FREE;
2. PRESSURE TEST PRIOR TO WRAPPING OR BACKFILLING.
3. ALL LISTED MATERIALS TO BE USED PER EMWD APPROVED MATERIAL LIST.
4. CORPORATION STOP & FITTINGS AT PIPELINE SHALL BE PRIMED AND WRAPPED WITH APPROVED COAL TAR RESIN TAPE.
5. ALL SERVICE PIPE & TUBING SHALL BE LAID ON A CONSTANT SLOPE UP FROM WATER MAIN TO METER. NO DIPS OR POCKETS WILL BE PERMITTED. 36"COVER AT GAS MAIN CROSSINGS.
6. THREAD NOTATION SHOWN THUS:
   IP = IRON PIPE THREAD;
   CS = CORPORATION STOP (MUELLER) THREAD;
   PJ = PACK JOINT.
7. METER BOX SHALL BE EMWD APPROVED 17" X 28" COMPLETE WITH COVER, LID & BASE WITH KNOCKOUTS (SEE NOTE 10 FOR SIDEWALK INSTALLATION). UPON EMWD ACCEPTANCE THE METER BOX WILL BE THE PROPERTY OF EMWD.
8. WHEN METER IS FURNISHED BY OTHERS, USE METER MANUFACTURERS SPECIFICATIONS FOR METER LAY LENGTH SPACING. SEE EMWD APPROVED MATERIAL LIST FOR APPROVED METERS.
   ANGLE METER STOP SHALL BE LOCKED CLOSED BY EMWD INSPECTIONS DEPT.
9. METER PORT HOLES CENTER TO BE INSTALLED 9-3/4" BELOW TOP OF METER BOX.
10. WHEN INSTALLED IN CONCRETE (SIDEWALK) USE EMWD APPROVE 17" X 30" METER BOX COMPLETE WITH COVER AND LID.
11. SERVICES THAT REQUIRE BACKFLOW PROTECTION FOR ONSITE HAZARDS PER EMWD ORD. 69 SHALL BE PER B-597.
12. FIRE SYSTEM CUSTOMER SERVICE VALVE SHALL BE SECURED IN THE OPEN POSITION BY AN EMWD APPROVED DEVICE.
2 13. INSTALL 1/2" PVC SCH. 40 ELECTRICAL CONDUIT BETWEEN ALL METER BOXES & STUBBED INSIDE, THAT ARE LOCATED NEAR PL WITHNIN 10' OF EA. OTHER.
   TAPE END OF SWEEPS PREVENTING DEBRIS FROM ENTERING CONDUIT.

REVISIONS					
NO.	DATE	INITIAL	DESCRIPTION	APP'D	DATE
3	4-19-12	GS	REVISED ELECTRICAL CONDUIT TO 1 1/2"	WB	4/20/12
2	10-21-11	GS	ADDED NOTE 13 & ELECTRICAL CONDUIT DRAWING	SMM	10/26/11
1	6-30-11	GS	REMOVED BACKFLOW, METER BOX & REVISED NOTES	SMM	6/30/11

APPROVALS		
	INITIAL	DATE
NBD	YJB	3/14/11
MAINTENANCE		
INSPECTION	JCW	3/14/11
OPERATIONS	KG	3/14/11

EASTERN MUNICIPAL WATER DISTRICT

REFERENCES:
FILE I.D.: \kaua\eng\std dwgs\B965.dgn

SCALE: NONE
DRAWN BY GWS

RECOMMENDED Joe Mouawad 3/15/11
DIRECTOR OF ENGINEERING — DATE

APPROVED Charlie J Bachmann 3/14/11
ASSISTANT GENERAL MANAGER — DATE

EASTERN MUNICIPAL WATER DISTRICT
STANDARD DRAWING

1" RESIDENTIAL METER SERVICE CONNECTION 1" COPPER TUBING

B-965 3

NOTES:

1. DOUBLE CHECK BACKFLOW PREVENTER ASSEMBLIES MAY ONLY BE INSTALLED FOR LOW HAZARD (NON-CHEMICAL) AREAS AND MUST BE APPROVED BY BOTH EMWD INSPECTION AND CROSS CONNECTION STAFF.

2. PROVIDE AN USC APPROVED BACKFLOW PREVENTION ASSEMBLY AS DESIGNATED BY EMWD APPROVED MATERIALS LIST SPECIFICATIONS.

3. EMWD MAINTENANCE RESPONSIBILITY STOPS AT THE METER. THE CUSTOMER IS RESPONSIBLE TO TEST AND MAINTAIN THE BACKFLOW PREVENTION ASSEMBLY, IN ACCORDANCE WITH EMWD ORD. 69.

4. ONLY RIVERSIDE COUNTY CERTIFIED BACKFLOW TESTERS LISTED ON THE EMWD APPROVED BACKFLOW TESTER LIST ARE ALLOWED TO TEST OR MAINTAIN BACKFLOW ASSEMBLIES WITHIN EMWD SERVICE AREA.

5. BACKFLOW CERTIFICATION TESTING IS REQUIRED ANNUALLY AT A MINIMUM BUT MAY BE MORE FREQUENT AS DEEMED NECESSARY BY EMWD. CERTIFICATION TESTING IS REQUIRED IMMEDIATELY AFTER AN ASSEMBLY IS RELOCATED, REPLACED, REPAIRED, NEW INSTALLATION ACCEPTANCE AND WATER DELIVERY PER EMWD ORD. 69 PRIOR TO NEW INSTALLATION ACCEPTANCE AND WATER DELIVERY.

6. BACKFLOW PREVENTION ASSEMBLY SIZE SHALL MATCH THE DIAMETER OF THE METER IN ACCORDANCE WITH THE UNIFORM PLUMBING CODE; CHAPTER 6, SECTION 610 AS AMENDED, OR UP TO 1" INCH LARGER.

7. BACKFLOW PREVENTION ASSEMBLY INSTALLATIONS INCLUDING ALL APPURTENACES FOR THE SUPPLY OF DOMESTIC WATER SHALL COMPLY WITH THE REQUIREMENTS OF THE CALIFORNIA LEAD-FREE ACT AB1953.

8. BACKFLOW PREVENTION ASSEMBLIES SHALL BE LOCATED AS CLOSE AS PRACTICAL TO THE WATER METER BOX BUT NOT FURTHER THAN 3 FEET UNLESS A VARIANCE IS OBTAINED FROM AN EMWD CROSS-CONNECTION SPECIALIST PRIOR TO INSTALLATION.

9. NO OUTLETS, TEES, OR CONNECTIONS SHALL BE ALLOWED BETWEEN THE METER AND THE BACKFLOW PREVENTION ASSEMBLY.

10. BACKFLOW PREVENTION ASSEMBLIES SHALL MAINTAIN A VERTICAL CLEARANCE FROM THE LOWEST POINT OF 12 INCHES (MINIMUM) TO 36 INCHES (MAXIMUM) ABOVE FINISHED GRADE, WITH SIDE AND TOP CLEARANCES OF 12 INCHES (MINIMUM) FROM ANY OBSTRUCTIONS IN ALL DIRECTIONS.

11. POLYETHYLENE ENCASEMENT SHALL BE INSTALLED PER ANSI/AWWA C105/A21.5 REQUIREMENTS.
HIGH-DENSITY POLYETHYLENE (HDCLPE) SHALL BE A MINIMUM OF .004 (4 MIL) THICKNESS.
LOW-DENSITY POLYETHYLENE (LLDPE) SHALL BE A MINIMUM OF .008 (8 MIL) THICKNESS.

RECOMMENDATIONS:

12. PARALLEL INSTALLATIONS OF THE SAME TYPE OF BACKFLOW PREVENTION ASSEMBLIES ARE STRONGLY RECOMMENDED FOR ALL FACILITIES REQUIRING UNINTERRUPTED WATER SUPPLY.

13. FREEZE PROTECTION IS RECOMMENDED. TESTCOCK OPENINGS SHALL BE LEFT EXPOSED.

14. THEFT PREVENTION DEVICES ARE STRONGLY RECOMMENDED FOR BRONZE ASSEMBLIES ALLOWING ADEQUATE ACCESS TO THE ASSEMBLY FOR TESTING AND MAINTENANCE.

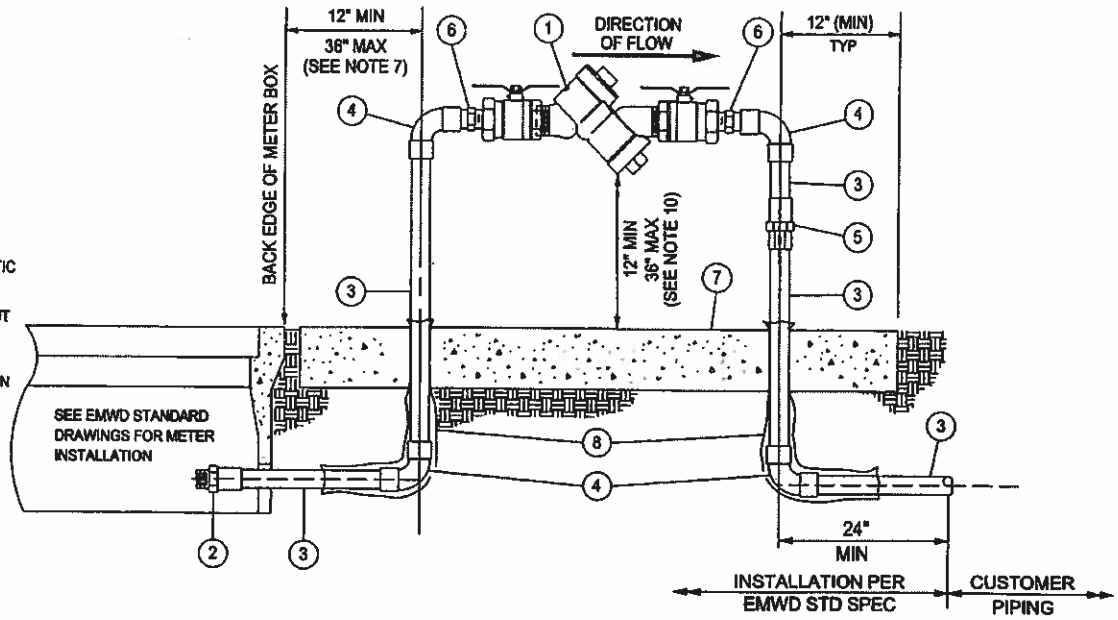

ITEM	DESCRIPTION
1	3/4" THRU 2" DOUBLE CHECK BACKFLOW PREVENTER WITH VALVES
2	COPPER ADAPTER, COPPER SOLDER JOINT x MALE IPT
3	COPPER WATER TUBE, TYPE L HARD OR BRASS
4	COPPER 90° ELBOW WITH COPPER SOLDER JOINTS
5	COPPER UNION WITH COPPER SOLDER JOINTS
6	COPPER ADAPTER, MALE SOLDER x MALE IPT
7	18" WIDE x 4" THICK CONCRETE PAD, LENGTH VARIES PER SIZE
8	POLYETHYLENE ENCASEMENT (SEE NOTE 11)

REVISIONS

NO.	DATE	INITIAL	DESCRIPTION	APP'D	DATE

APPROVALS

	INITIAL	DATE
NEW BUSINESS	VJB	11/14/11
MAINTENANCE	MM	11/15/11
INSPECTION	JEW	11/14/11
OPERATIONS	KrGa	11/14/11
SUBMITTED		

EASTERN MUNICIPAL WATER DISTRICT

REFERENCES:

FILE I.D.: \kauai\eng\stddwgs\B-966.dgn

SCALE: NONE

DRAWN BY SL

RECOMMENDED _____ DIRECTOR OF ENGINEERING 11-29-11 DATE

APPROVED _____ ASSISTANT GENERAL MANAGER 11/30/11 DATE

EASTERN MUNICIPAL WATER DISTRICT

STANDARD DRAWING

DOUBLE CHECK BACKFLOW PREVENTER ASSY FOR SIZES 3/4" THROUGH 2"

B-966

NOTES:
1. DOUBLE CHECK BACKFLOW PREVENTER ASSEMBLIES MAY ONLY BE INSTALLED FOR LOW HAZARD (NON-CHEMICAL) AREAS AND MUST BE APPROVED BY BOTH EMWD INSPECTION AND CROSS CONNECTION STAFF.

2. PROVIDE AN USC APPROVED BACKFLOW PREVENTION ASSEMBLY AS DESIGNATED BY EMWD APPROVED MATERIALS LIST SPECIFICATIONS.

3. EMWD MAINTENANCE RESPONSIBILITY STOPS AT THE METER. THE CUSTOMER IS RESPONSIBLE TO TEST AND MAINTAIN THE BACKFLOW PREVENTION ASSEMBLY, IN ACCORDANCE WITH EMWD ORD. 69.

4. ONLY RIVERSIDE COUNTY CERTIFIED BACKFLOW TESTERS LISTED ON THE EMWD APPROVED BACKFLOW TESTER LIST ARE ALLOWED TO TEST AND MAINTAIN BACKFLOW ASSEMBLIES WITHIN EMWD SERVICE AREA.

5. BACKFLOW CERTIFICATION TESTING IS REQUIRED ANNUALLY AT A MINIMUM BUT MAY BE MORE FREQUENT AS DEEMED NECESSARY BY EMWD. CERTIFICATION TESTING IS REQUIRED IMMEDIATELY AFTER AN ASSEMBLY IS RELOCATED, REPLACED, REPAIRED, NEW INSTALLATION ACCEPTANCE AND WATER DELIVERY PER EMWD ORD. 69 PRIOR TO NEW INSTALLATION ACCEPTANCE AND WATER DELIVERY.

6. BACKFLOW PREVENTION ASSEMBLY SIZE SHALL MATCH THE DIAMETER OF THE METER IN ACCORDANCE WITH THE UNIFORM PLUMBING CODE; CHAPTER 6, SECTION 610 AS AMENDED, OR UP TO 1" INCH LARGER.

7. BACKFLOW PREVENTION ASSEMBLY INSTALLATIONS INCLUDING ALL APPURTENACES FOR THE SUPPLY OF DOMESTIC WATER SHALL COMPLY WITH THE REQUIREMENTS OF THE CALIFORNIA LEAD-FREE ACT AB1953.

8. BACKFLOW PREVENTION ASSEMBLIES SHALL BE LOCATED AS CLOSE AS PRACTICAL TO THE WATER METER BOX BUT NOT FURTHER THAN 3 FEET UNLESS A VARIANCE IS OBTAINED FROM AN EMWD CROSS-CONNECTION SPECIALIST PRIOR TO INSTALLATION.

9. NO OUTLETS, TEES, OR CONNECTIONS SHALL BE ALLOWED BETWEEN THE METER AND THE BACKFLOW PREVENTION ASSEMBLY.

10. BACKFLOW PREVENTION ASSEMBLIES SHALL MAINTAIN A VERTICAL CLEARANCE FROM THE LOWEST POINT OF 12 INCHES (MINIMUM) TO 36 INCHES (MAXIMUM) ABOVE FINISHED GRADE, WITH SIDE AND TOP CLEARANCES OF 12 INCHES (MINIMUM) FROM ANY OBSTRUCTIONS IN ALL DIRECTIONS.

11. POLYETHYLENE ENCASEMENT SHALL BE INSTALLED PER ANSI/AWWA C105/A21.5 REQUIREMENTS.
HIGH-DENSITY POLYETHYLENE (HDCLPE) SHALL BE A MINIMUM OF .004 (4 MIL) THICKNESS.
LOW-DENSITY POLYETHYLENE (LLDPE) SHALL BE A MINIMUM OF .008 (8 MIL) THICKNESS.

RECOMMENDATIONS:

12. PARALLEL INSTALLATIONS OF THE SAME TYPE OF BACKFLOW PREVENTION ASSEMBLIES ARE STRONGLY RECOMMENDED FOR ALL FACILITIES REQUIRING UNINTERRUPTED WATER SUPPLY.

13. FREEZE PROTECTION IS RECOMMENDED. TESTCOCK OPENINGS SHALL BE LEFT EXPOSED.

14. THEFT PREVENTION DEVICES ARE STRONGLY RECOMMENDED FOR BRONZE ASSEMBLIES ALLOWING ADEQUATE ACCESS TO THE ASSEMBLY FOR TESTING AND MAINTENANCE.

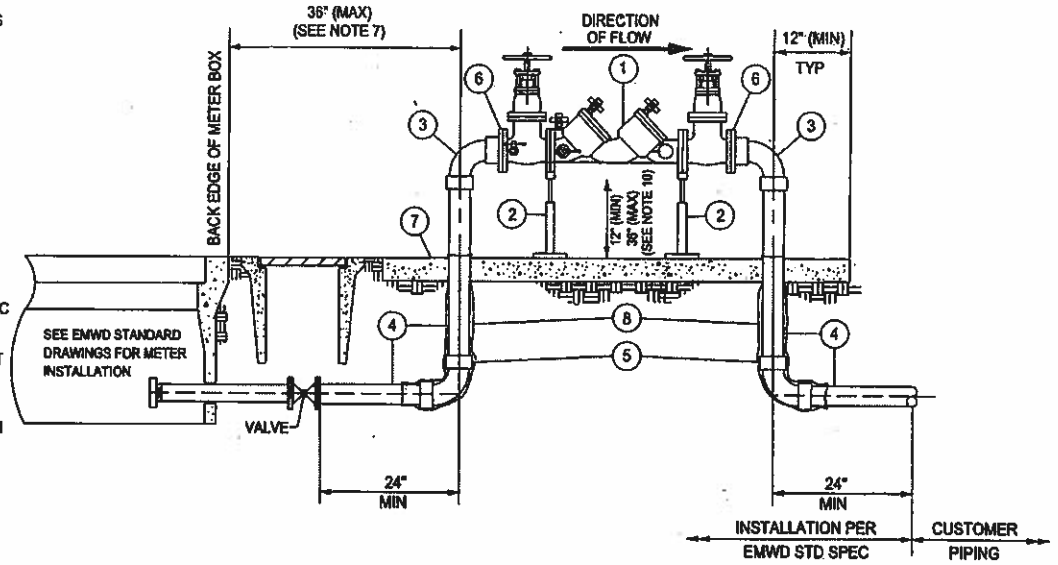

ITEM	DESCRIPTION
1	2-1/2" AND 3" DOUBLE CHECK BACKFLOW PREVENTER ASSEMBLY WITH VALVES
2	ADJUSTABLE PIPE SUPPORT
3	COPPER 90° ELBOW, CLOSE ROUGH, SLIP JT x SOLDER JT
4	COPPER WATER TUBE, TYPE L, HARD
5	COPPER 90° ELBOW, CLOSE ROUGH, SOLDER JOINTS
6	CL 150 CAST BRZ COMPANION FLANGE WITH THD SOLDER JOINT END
7	24" WIDE x 4" THICK CONCRETE PAD, LENGTH VARIES PER BACKFLOW SIZE
8	POLYETHYLENE ENCASEMENT (SEE NOTE 11)

REVISIONS					
NO.	DATE	INITIAL	DESCRIPTION	APP'D	DATE

APPROVALS		
	INITIAL	DATE
NEW BUSINESS	[illegible]	11/9/11
MAINTENANCE	[illegible]	11/15/11
INSPECTION	JEW	11/14/11
OPERATIONS	K.G.	11/14/11
SUBMITTED		

EASTERN MUNICIPAL WATER DISTRICT

EASTERN MUNICIPAL WATER DISTRICT
STANDARD DRAWING

DOUBLE CHECK BACKFLOW PREVENTER
ASSY FOR SIZES 2 1/2" THROUGH 3"

REFERENCES:
FILE I.D.: \\eausfeng\stddwgs\B-967.dgn

SCALE: NONE
DRAWN BY SL

RECOMMENDED [signature] DIRECTOR OF ENGINEERING 11-29-11 DATE

APPROVED [signature] ASSISTANT GENERAL MANAGER 11/30/11 DATE

B-967

NOTES:

1. DOUBLE CHECK BACKFLOW PREVENTER ASSEMBLIES MAY ONLY BE INSTALLED FOR LOW HAZARD (NON-CHEMICAL) AREAS AND MUST BE APPROVED BY BOTH EMWD INSPECTION AND CROSS CONNECTION STAFF.

2. PROVIDE AN USC APPROVED BACKFLOW PREVENTION ASSEMBLY AS DESIGNATED BY EMWD APPROVED MATERIALS LIST, SPECIFICATIONS.

3. EMWD MAINTENANCE RESPONSIBILITY STOPS AT THE METER. THE CUSTOMER IS RESPONSIBLE TO TEST AND MAINTAIN THE BACKFLOW PREVENTION ASSEMBLY, IN ACCORDANCE WITH EMWD ORD. 69.

4. ONLY RIVERSIDE COUNTY CERTIFIED BACKFLOW TESTERS LISTED ON THE EMWD APPROVED BACKFLOW TESTER LIST ARE ALLOWED TO TEST OR MAINTAIN BACKFLOW ASSEMBLIES WITHIN EMWD SERVICE AREA.

5. BACKFLOW CERTIFICATION TESTING IS REQUIRED ANNUALLY AT A MINIMUM BUT MAY BE MORE FREQUENT AS DEEMED NECESSARY BY EMWD. CERTIFICATION TESTING IS REQUIRED IMMEDIATELY AFTER AN ASSEMBLY IS RELOCATED, REPLACED, REPAIRED, NEW INSTALLATION ACCEPTANCE AND WATER DELIVERY PER EMWD ORD. 69 PRIOR TO NEW INSTALLATION ACCEPTANCE AND WATER DELIVERY.

6. BACKFLOW PREVENTION ASSEMBLY SIZE SHALL MATCH THE DIAMETER OF THE METER IN ACCORDANCE WITH THE UNIFORM PLUMBING CODE; CHAPTER 6, SECTION 610 AS AMENDED, OR UP TO 1" INCH LARGER.

7. BACKFLOW PREVENTION ASSEMBLY INSTALLATIONS INCLUDING ALL APPURTENACES FOR THE SUPPLY OF DOMESTIC WATER SHALL COMPLY WITH THE REQUIREMENTS OF THE CALIFORNIA LEAD-FREE ACT AB1953.

8. BACKFLOW PREVENTION ASSEMBLIES SHALL BE LOCATED AS CLOSE AS PRACTICAL TO THE WATER METER BOX BUT NOT FURTHER THAN 3 FEET UNLESS A VARIANCE IS OBTAINED FROM AN EMWD CROSS-CONNECTION SPECIALIST PRIOR TO INSTALLATION.

9. NO OUTLETS, TEES, OR CONNECTIONS SHALL BE ALLOWED BETWEEN THE METER AND THE BACKFLOW PREVENTION ASSEMBLY.

10. BACKFLOW PREVENTION ASSEMBLIES SHALL MAINTAIN A VERTICAL CLEARANCE FROM THE LOWEST POINT OF 12 INCHES (MINIMUM) TO 35 INCHES (MAXIMUM) ABOVE FINISHED GRADE, WITH SIDE AND TOP CLEARANCES OF 12 INCHES (MINIMUM) FROM ANY OBSTRUCTIONS IN ALL DIRECTIONS.

11. POLYETHYLENE ENCASEMENT SHALL BE INSTALLED PER ANSI/AWWA C105/A21.5 REQUIREMENTS.
HIGH-DENSITY POLYETHYLENE (HDCLPE) SHALL BE A MINIMUM OF .004 (4 MIL) THICKNESS.
LOW-DENSITY POLYETHYLENE (LLDPE) SHALL BE A MINIMUM OF .008 (8 MIL) THICKNESS.

12. ALL DUCTILE IRON PIPE JOINTS SHALL BE THE RESTRAINT TYPE.

RECOMMENDATIONS:

13. PARALLEL INSTALLATIONS OF THE SAME TYPE OF BACKFLOW PREVENTION ASSEMBLIES ARE STRONGLY RECOMMENDED FOR ALL FACILITIES REQUIRING UNINTERRUPTED WATER SUPPLY.

14. FREEZE PROTECTION IS RECOMMENDED, BUT THE RELIEF VALVE MUST BE ABLE TO VENT FREELY AND TESTCOCK OPENINGS SHALL BE LEFT EXPOSED.

15. THEFT PREVENTION DEVICES ARE STRONGLY RECOMMENDED FOR BRONZE ASSEMBLIES ALLOWING ADEQUATE ACCESS TO THE ASSEMBLY FOR TESTING AND MAINTENANCE.

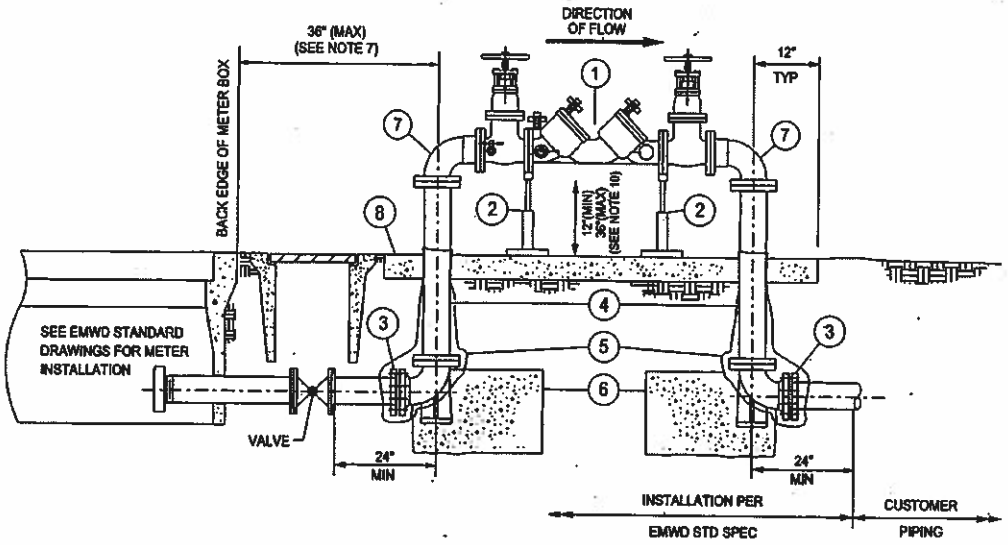

ITEM	DESCRIPTION
1	4" THRU 10" DOUBLE CHECK BACKFLOW PREVENTER ASSEMBLY WITH VALVES
2	ADJUSTABLE PIPE SUPPORT
3	DI BASE BEND WITH CL 150 FLANGE X MECHANICAL JOINT
4	CLASS 53 DUCTILE IRON PIPE WITH CL 150 FLANGES
5	POLYETHYLENE ENCASEMENT PER ANSI/AWWA C105/A21.5 (SEE NOTE 11)
6	CONCRETE THRUST BLOCK PER B-407
7	DUCTILE IRON ¼ BEND WITH CL 150 FLANGES
8	36" WIDE X 4" THICK CONCRETE PAD, LENGTH VARIES PER BACKFLOW SIZE

REVISIONS

NO.	DATE	INITIAL	DESCRIPTION	APP'D	DATE

APPROVALS

	INITIAL	DATE
NEW BUSINESS	DJG	11/7/11
MAINTENANCE	TH	11/15/11
INSPECTION	JEW	11/14/11
OPERATIONS	KG	11/14/11
SUBMITTED		

REFERENCES:

FILE I.D.: \\eausfiang\stddwgs\B-968.dgn

SCALE: NONE

DRAWN BY SL

RECOMMENDED _____ DIRECTOR OF ENGINEERING 11-29-11 DATE

EASTERN MUNICIPAL WATER DISTRICT

EASTERN MUNICIPAL WATER DISTRICT

EASTERN MUNICIPAL WATER DISTRICT
STANDARD DRAWING

DOUBLE CHECK BACKFLOW PREVENTER ASSY FOR SIZES 4" THROUGH 10"

APPROVED _____ ASSISTANT GENERAL MANAGER 11/30/11 DATE

B-968

EMWD STANDARD DRAWING
METER REFERENCE TABLE

SIZE	ITEM	DRAWING #
3"	METER	B-633
4"	METER	B-634
6"	METER	B-635
8"	METER	B-636
4"-10"	DCDA	B-657

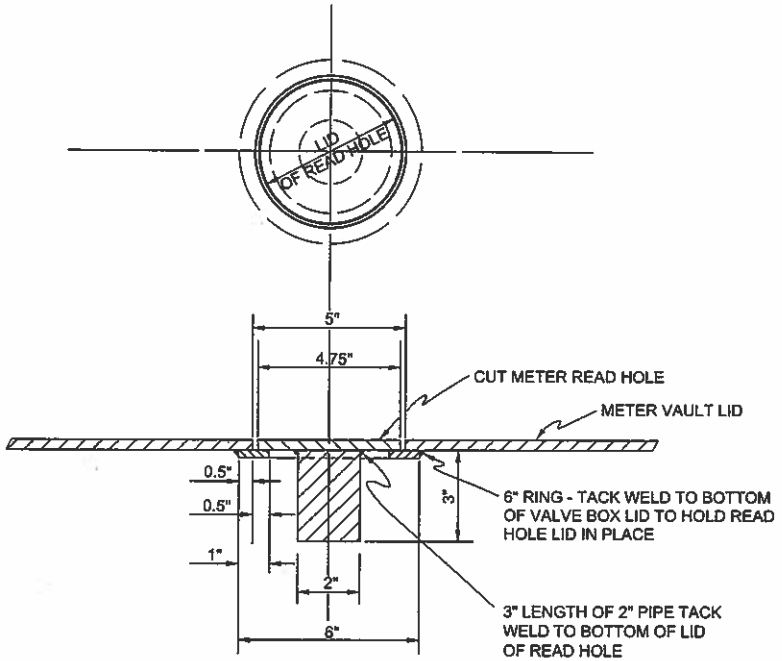

NOTES

1. READ HOLE(S) SHALL BE POSITIONED OVER METER REGISTER(S) AFTER METER INSTALLATION.
2. VAULT LIDS SHALL BE PRIMED AND PAINTED EMWD APPROVED TAN.
3. ALL MATERIALS SHALL BE PER EMWD APPROVED MATERIAL LIST.

REVISIONS

NO.	DATE	INITIAL	DESCRIPTION	APP'D	DATE

APPROVALS

	INITIAL	DATE
NBD	SMM	5/7/12
MAINTENANCE	[illegible]	5/18/12
INSPECTION	JEW	5/8/12
OPERATIONS	KG	5/8/12
SUBMITTED		

EASTERN MUNICIPAL WATER DISTRICT

EASTERN MUNICIPAL WATER DISTRICT
STANDARD DRAWING

READ HOLE FOR METER VAULTS

REFERENCES: A-496
SCALE: NONE
FILE I.D.: \kauai\eng\stddrwgs\B-xxx.dgn
DRAWN BY: GS

RECOMMENDED [signature] DIRECTOR OF ENGINEERING 5/21/12 DATE

APPROVED [signature] ASSISTANT GENERAL MANAGER 5/22/12 DATE

B-976

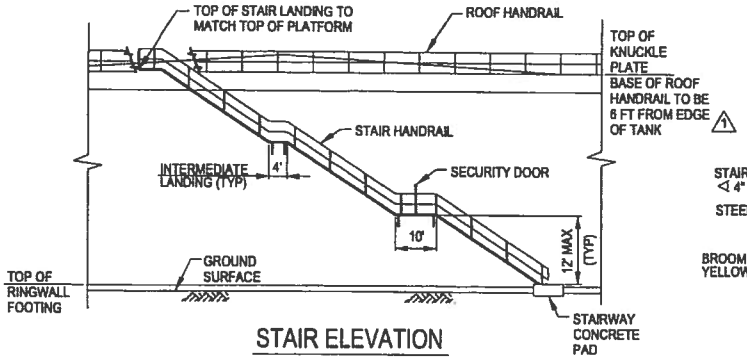

STAIR ELEVATION

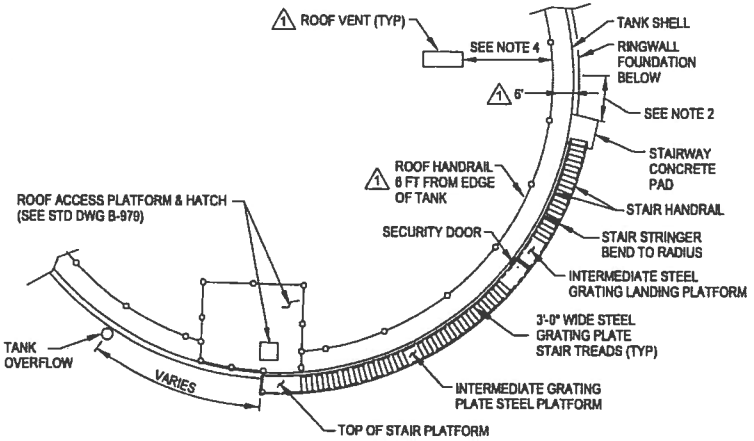

EXTERIOR STAIR PLAN

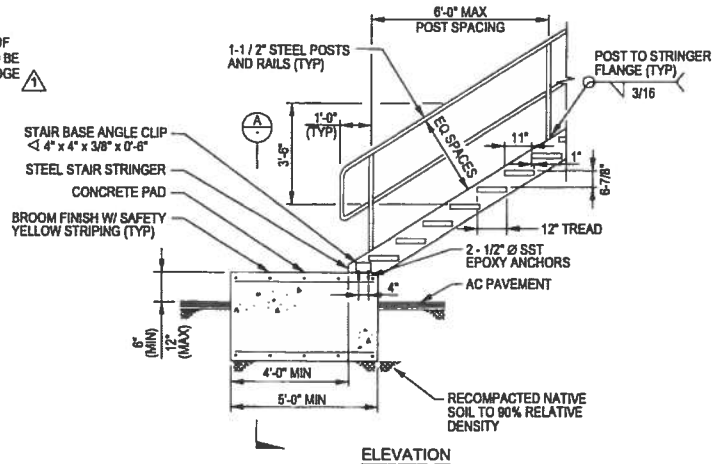

ELEVATION

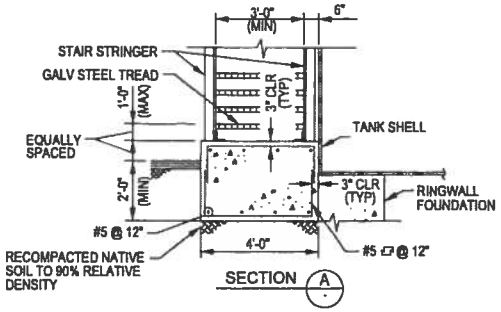

STAIRWAY HANDRAIL AND CONCRETE PAD

STAIRWAY DESIGN LOADS

STAIR TREAD = 100 PSF
STAIR LANDING = 125 PSF
HANDRAILING = ASCE 7-10

SCHEDULE OF MATERIALS

HANDRAIL	STEEL, PAINTED TO MATCH TANK EXTERIOR
GRATING (STAIR TREADS AND PLATFORM)	STEEL, PAINTED TO MATCH TANK EXTERIOR
SECURITY DOOR	STEEL, PAINTED TO MATCH TANK EXTERIOR
STAIR STRINGERS	STEEL, PAINTED TO MATCH TANK EXTERIOR

NOTES:

1. STAIR TREAD TO HAVE RISE AND RUN PER OSHA REQUIREMENTS. HEIGHT OF CONCRETE LANDING PAD ABOVE GROUND TO BE EQUAL TO STAIR RISE.
2. BOTTOM OF STAIRWAY SHALL BE AT LEAST 4'-0" CLEAR OF OBSTRUCTIONS FOR APPROPRIATE ACCESS.
3. KEEP TOP AND SIDES OF HANDRAIL CLEAR. ONLY HANDRAIL AT LANDINGS AND PLATFORM TO HAVE KICK PLATE.
4. PROVIDE SUFFICIENT CLEARANCE BETWEEN THE HANDRAIL AND ROOF VENTS.

REVISIONS

NO.	DATE	INITIAL	DESCRIPTION	APP'D	DATE
1	12/17/12	SL	REVISED ROOF HADRAIL AND ROOF VENT	WL	12.18.12

APPROVALS

	INITIAL	DATE
NEW BUSINESS	aga	8/16/12
MAINTENANCE	MJ	8/29/12
INSPECTION	ED	8/29/12
OPERATIONS	RG	8/28/12
SUBMITTED	GJK	8/14/12

EASTERN MUNICIPAL WATER DISTRICT

EASTERN MUNICIPAL WATER DISTRICT
STANDARD DRAWING

TYPICAL STEEL TANK CIRCUMFERENTIAL STAIRWAY
(VARIES PER TANK SIZE AND HEIGHT)
SHEET 1 OF 2

REFERENCES:
FILE I.D.: \kauai\eng\stddwgs\B-966.dgn

SCALE: NONE
DRAWN BY SL

RECOMMENDED Joe Mouawad 8/15/12
DIRECTOR OF ENGINEERING DATE

APPROVED Charlie J. Bachmann 8/29/12
ASSISTANT GENERAL MANAGER OF ENGINEERING DATE

B-977

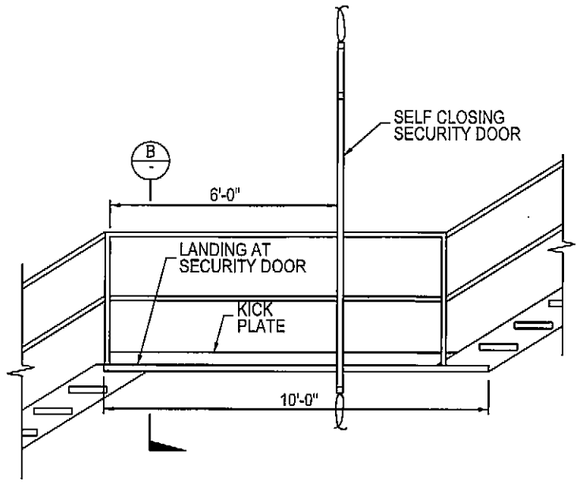

ELEVATION

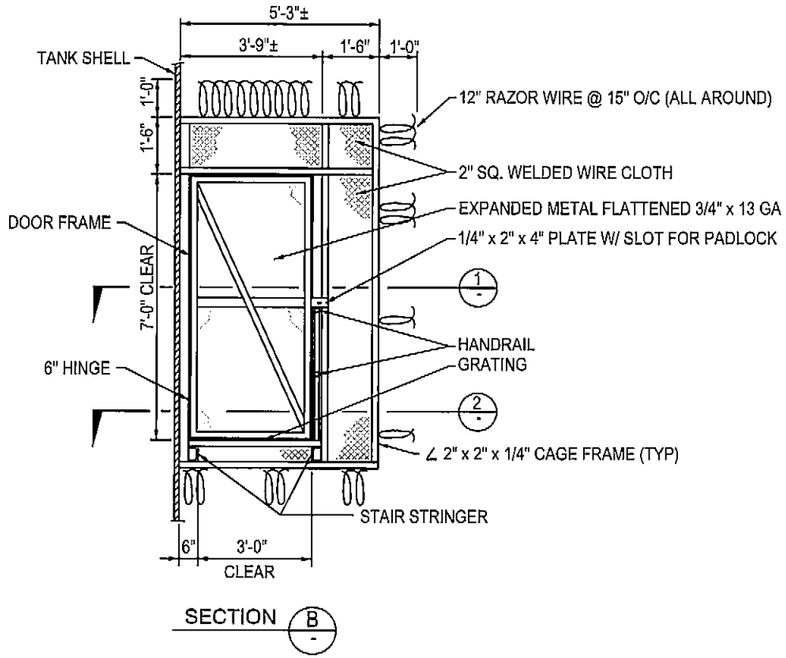

SECTION B

STAIRWAY DESIGN LOADS

STAIR TREAD = 100 PSF
STAIR LANDING = 125 PSF
HANDRAILING = ASCE 7-10

SCHEDULE OF MATERIALS

HANDRAIL	STEEL, PAINTED TO MATCH TANK EXTERIOR
GRATING (STAIR TREADS AND PLATFORM)	STEEL, PAINTED TO MATCH TANK EXTERIOR
SECURITY DOOR	STEEL, PAINTED TO MATCH TANK EXTERIOR
STAIR STRINGERS	STEEL, PAINTED TO MATCH TANK EXTERIOR

NOTES:

1. STAIR TREAD TO HAVE RISE AND RUN PER OSHA REQUIREMENTS. HEIGHT OF CONCRETE LANDING PAD ABOVE GROUND TO BE EQUAL TO STAIR RISE.
2. BOTTOM OF STAIRWAY SHALL BE AT LEAST 4'-0" CLEAR OF OBSTRUCTIONS FOR APPROPRIATE ACCESS.
3. KEEP TOP AND SIDES OF HANDRAIL CLEAR. ONLY HANDRAIL AT LANDINGS AND PLATFORM TO HAVE KICK PLATE.

SECURITY DOOR

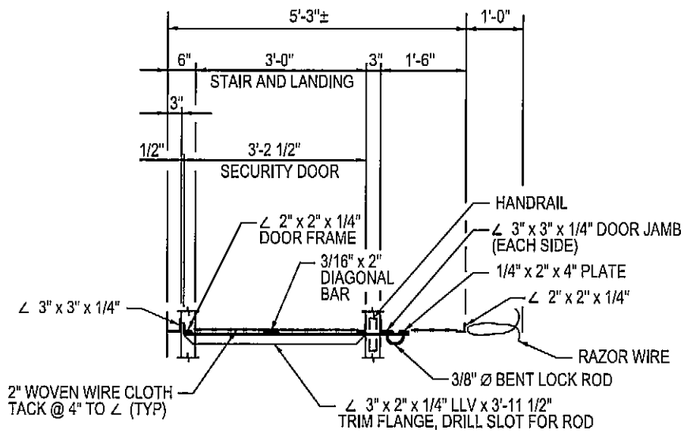

SECTION 1

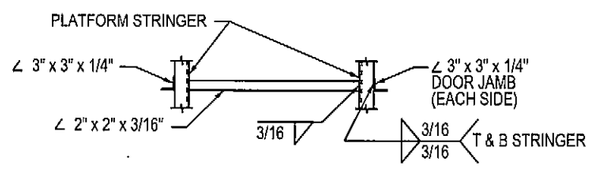

SECTION 2

REVISIONS					
NO.	DATE	INITIAL	DESCRIPTION	APP'D	DATE

APPROVALS		
	INITIAL	DATE
NEW BUSINESS	AGA	8/16/12
MAINTENANCE		8/29/12
INSPECTION		8/29/12
OPERATIONS	K.G.	8/28/12
SUBMITTED	GJK	8.14.12

EASTERN MUNICIPAL WATER DISTRICT

EASTERN MUNICIPAL WATER DISTRICT

EASTERN MUNICIPAL WATER DISTRICT
STANDARD DRAWING

TYPICAL STEEL TANK CIRCUMFERENTIAL STAIRWAY
(VARIES PER TANK SIZE AND HEIGHT)
SHEET 2 OF 2

REFERENCES:

FILE I.D.: \kauai\eng\stddwgs\B-966.dgn

SCALE: NONE

DRAWN BY SL

RECOMMENDED [signature] 8-15-12
DIRECTOR OF ENGINEERING DATE

APPROVED [signature] 8/29/12
ASSISTANT GENERAL MANAGER OF ENGINEERING DATE

B-978

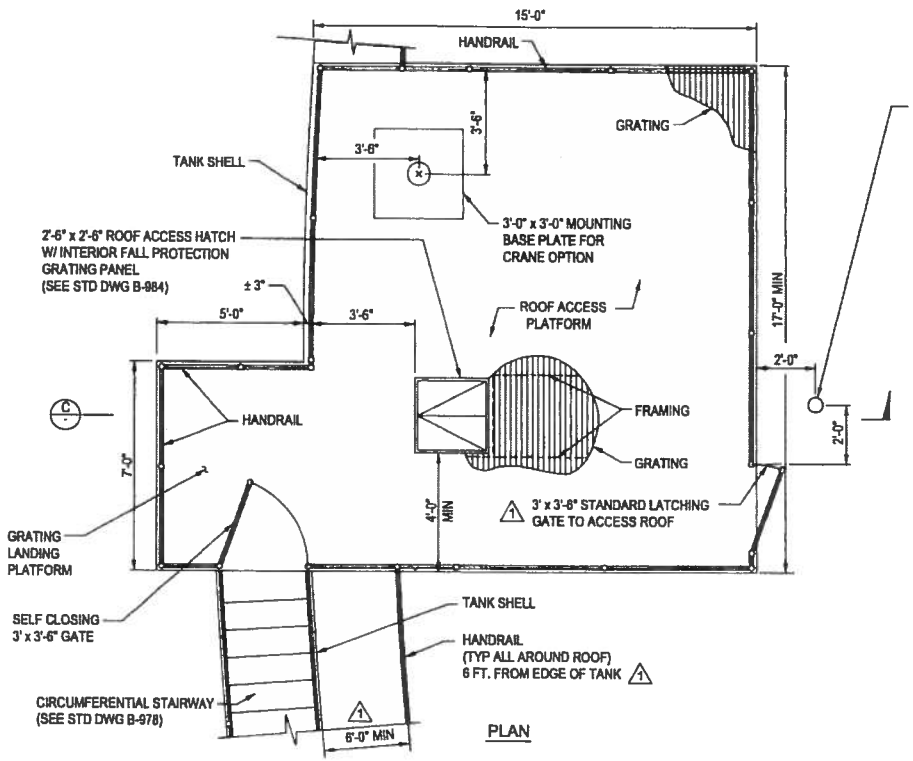

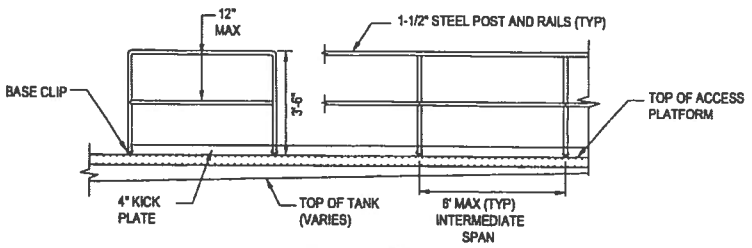

ROOF HANDRAIL

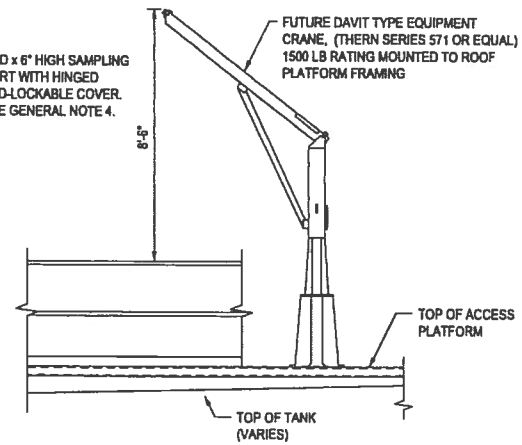

CRANE OPTION

SCHEDULE OF MATERIALS

ROOF ACCESS HATCH	STEEL, PAINTED TO MATCH TANK EXTERIOR
HANDRAIL	STEEL, PAINTED TO MATCH TANK EXTERIOR
GRATING	STEEL, PAINTED TO MATCH TANK EXTERIOR
SELF CLOSING GATE	STEEL, POWDER COATED YELLOW
KICK PLATE	4 X STEEL CHANNEL, PAINTED TO MATCH TANK EXTERIOR

GENERAL NOTES:

1. PLATFORM DESIGN LOAD = 125 PSF
   HANDRAILING DESIGN LOAD PER ASCE 7-10
2. PLATFORM BRACING AND ANCHOR PLATE CONNECTIONS TO TANK PER CONTRACTOR DESIGN.
3. NO INTERIOR LADDER. CONFINED SPACE ENTRY ONLY.
4. FOR AN EXISTING TANK RETROFIT, CUT A NEW PENETRATION IN THE ROOF AND INSTALL A 6" SAMPLING PORT.

CRANE OPTION NOTES:

1. THE DAVIT CRANE WILL NOT BE FURNISHED OR SUPPLIED UNLESS SPECIFICALLY NOTED IN THE CONTRACT SPECIFICATIONS.
2. A 36" SQ. x 3/4" THICK MOUNTING BASE PLATE FOR FUTURE MOUNTING OF THE CRANE BASE SHALL BE FURNISHED AND SUPPLIED WITH THE PLATFORM FRAMING AND GRATING.
3. THE CENTER OF THE MOUNTING BASE PLATE SHALL BE 3'-6" FROM THE PLATFORM HANDRAILING.
4. THE ROOF PLATFORM FRAMING SHALL BE DESIGNED TO ACCOMMODATE CRANE AND BASE PLATE LOADING.

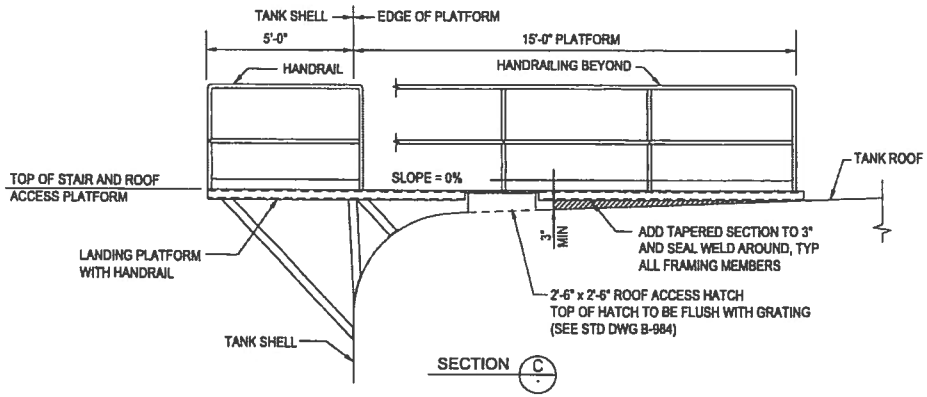

SECTION C

REVISIONS					
NO.	DATE	INITIAL	DESCRIPTION	APP'D	DATE
1	12/17/12	SL	REVISED ROOF HANDRAIL		12.18.12

APPROVALS		
	INITIAL	DATE
NEW BUSINESS	aga	8/16/12
MAINTENANCE	MJ	8/29/12
INSPECTION	CD	8/29/12
OPERATIONS	JG	8/28/12
SUBMITTED	GJK	8/14/12

EASTERN MUNICIPAL WATER DISTRICT

EASTERN MUNICIPAL WATER DISTRICT

EASTERN MUNICIPAL WATER DISTRICT
STANDARD DRAWING

STEEL TANK ROOF ACCESS PLATFORM AND HATCH

REFERENCES:

FILE I.D.: \kauaifeng\stddwgs\B-966.dgn

SCALE: NONE

DRAWN BY SL

RECOMMENDED Joe Mougawad 8/15/12
DIRECTOR OF ENGINEERING DATE

APPROVED Charlie L. Bachmann 8/29/12
ASSISTANT GENERAL MANAGER OF ENGINEERING DATE

B-979

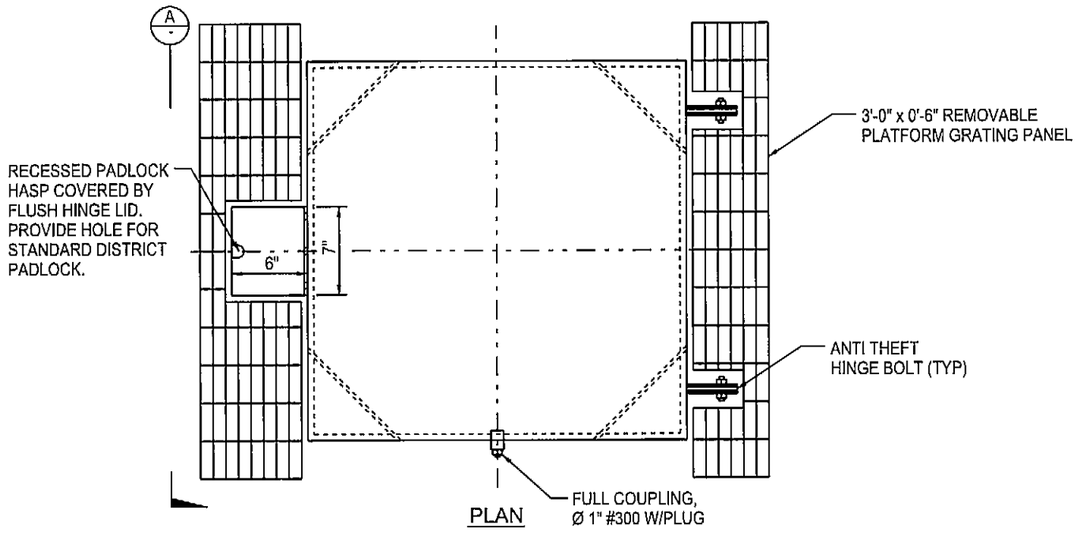

PLAN

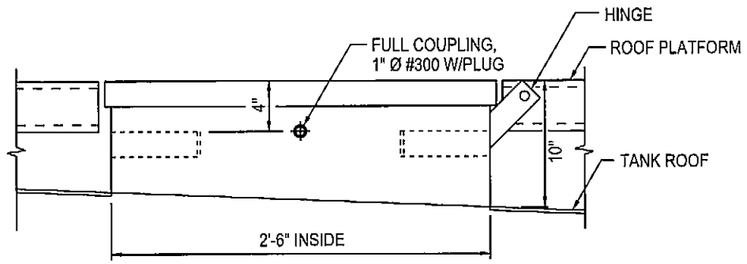

ELEVATION

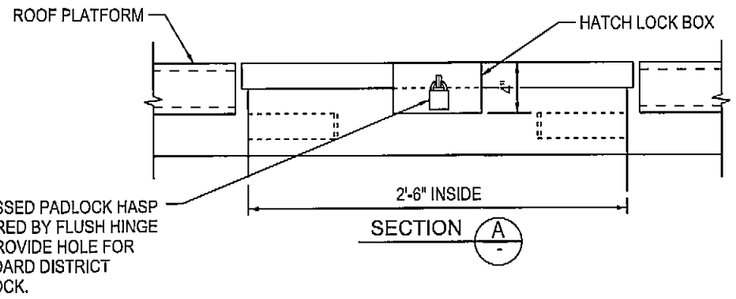

SECTION A

SQUARE ROOF HATCH

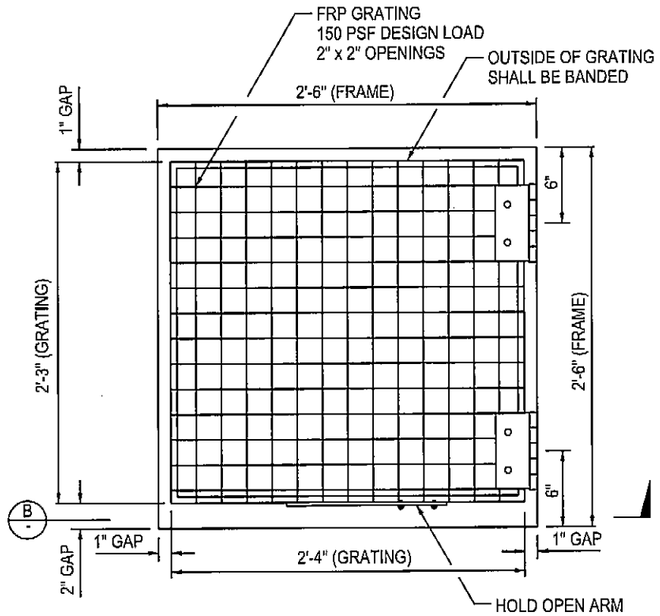

ROOF HATCH FALL PROTECTION GRATING - PLAN

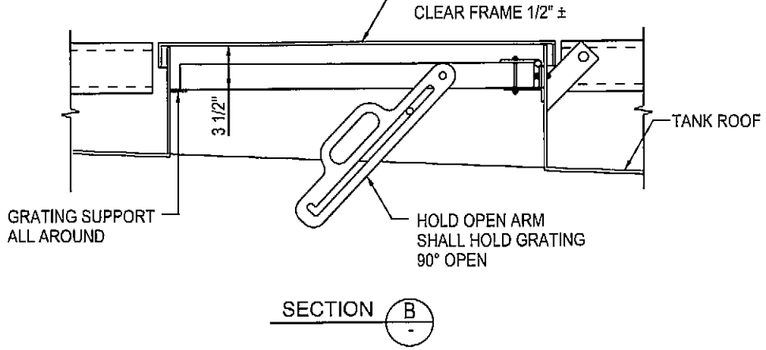

SECTION B

GENERAL NOTES:

1. ROOF HATCH TO BE COATED THE SAME AS TANK.
2. ROOF HATCH LID TO BE LEVEL AND LAY FLAT ON PLATFORM GRATING.
3. ALL ROOF HATCH AND FALL PROTECTION GRATING HARDWARE SHALL BE 316 STAINLESS STEEL.

REVISIONS					
NO.	DATE	INITIAL	DESCRIPTION	APP'D	DATE

APPROVALS		
	INITIAL	DATE
NEW BUSINESS	AGA	8/16/12
MAINTENANCE	[illegible]	8/29/12
INSPECTION	CD	8/29/12
OPERATIONS	K.G.	8/29/12
SUBMITTED	G/K	8-14-12

EASTERN MUNICIPAL WATER DISTRICT

REFERENCES:

FILE I.D.: \kauai\eng\stddwgs\B-966.dgn

SCALE: NONE

DRAWN BY SL

RECOMMENDED [signature] 8-15-12
DIRECTOR OF ENGINEERING DATE

EASTERN MUNICIPAL WATER DISTRICT

EASTERN MUNICIPAL WATER DISTRICT
STANDARD DRAWING

STEEL TANK ROOF HATCH

APPROVED [signature] 8/29/12
ASSISTANT GENERAL MANAGER OF ENGINEERING DATE

B- 984

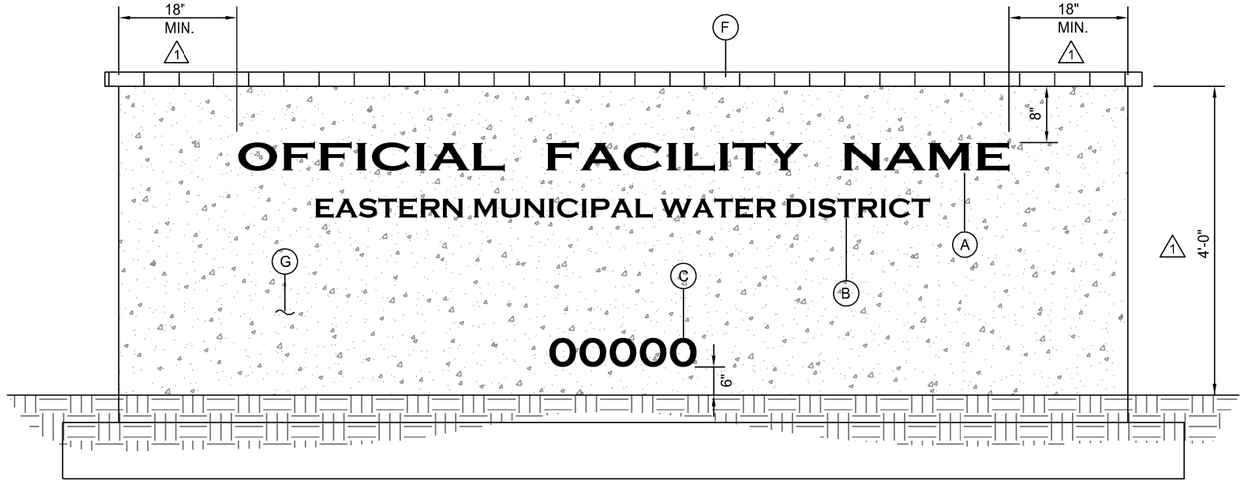

ELEVATION

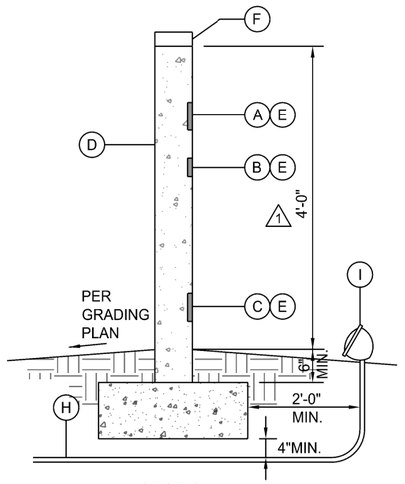

SECTION

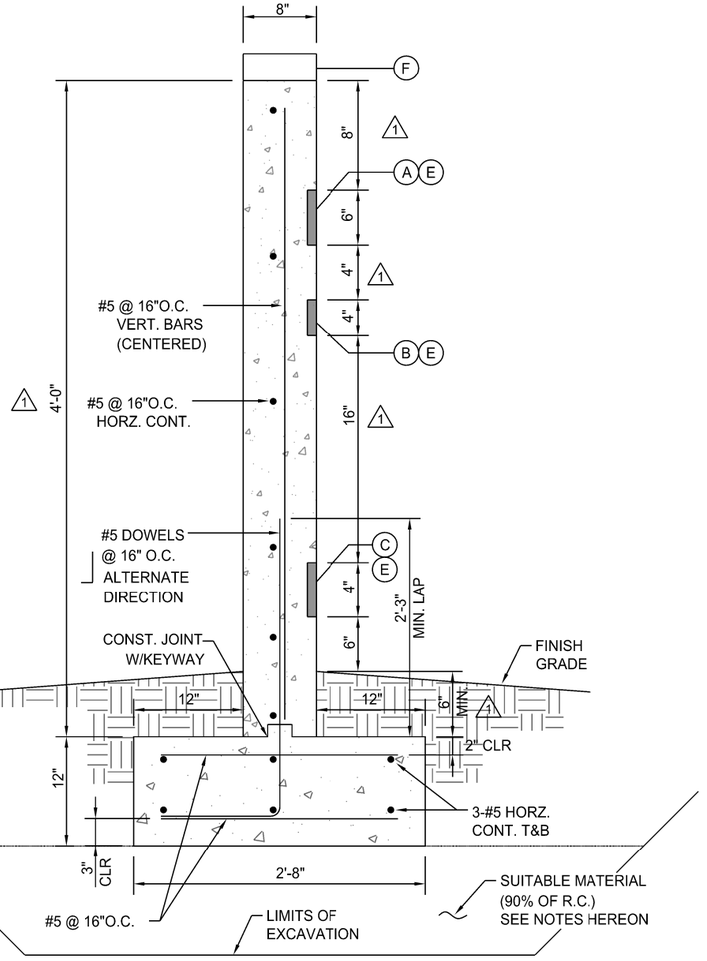

DETAIL

GENERAL NOTES

1. EMBOSSED LETTERING SHALL BE CENTERED HORIZONTALLY. LONGER FACILITY NAMES MAY CONTINUE ON A SECOND LINE (3" SPACING BETWEEN) UPON DISTRICT APPROVAL.
2. CONTRACTOR TO SUBMIT A LETTERING LAYOUT TO THE DISTRICT PRIOR TO CONSTRUCTION.
3. DIMENSIONS CONTINGENT UPON A GENERAL ARRANGEMENT DRAWING INCLUDING A FINAL LETTERING LAYOUT AS APPROVED BY THE DISTRICT.
4. THE FONT SHALL BE "COPPERPLATE GOTHIC BOLD" OR ALTERNATE AS APPROVED BY EMWD.
5. REFER TO CONTRACT SPECIAL CONDITIONS FOR ADDITIONAL REQUIREMENTS, IF APPLICABLE.
6. REFER TO EMWD'S SPECIFICATIONS FOR MATERIALS REQUIREMENTS AS FOLLOWS:
   SECTION 03150FORMWORK
   SECTION 03200REINFORCING
   SECTION 03300CAST-IN-PLACE CONCRETE
7. CONCRETE MIX DESIGN USED FOR THE MONUMENT SIGN SHALL ACCOUNT FOR CONSTRUCTABILITY ASPECTS RELATED TO THE CONCRETE FINISH AND PLACEMENT OF LETTERS. SUBMIT MIX DESIGN TO THE DISTRICT FOR APPROVAL.
8. ALL EXPOSED SURFACES TO RECEIVE COMPLETE ANTI-GRAFFITTI COATING SYSTEM PER DIVISION 9 COATING SPECIFICATION.
9. CONCRETE TO BE PATCHED AND SACKED PER EMWD SPECIFICATIONS PRIOR TO APPLICATION OF ANTI-GRAFFITI COATING.
10. OVER-EXCAVATE & RE-COMPACT SUITABLE MATERIAL TO 90% OF RELATIVE COMPACTION TO A DEPTH OF 12" BELOW THE PROPOSED FOOTING BASE GRADE U.N.O. IN THE FIELD BY THE GEOTECHNICAL ENGINEER.
11. IF MONUMENT SIGN IS TO BE USED AS A RETAINING WALL, CONTRACTOR SHALL SUBMIT A STRUCTURAL DESIGN STAMPED BY A REGISTERED ENGINEER LICENSED IN THE STATE OF CALIFORNIA.
12. CONTRACTOR SHALL COORDINATE LIGHTING CONDUIT LOCATIONS WITH DISTRICT.
13. TRENCH BELOW FOOTING FOR LIGHTING CONDUIT SHALL BE FILLED WITH CONCRETE OR 3-SACK SLURRY PER SECTION 16050 BEFORE POURING FOOTING. CONCRETE FILL SHALL BE SAME WIDTH AS FOOTING AND FULL WIDTH OF PIPE TRENCH.

MONUMENT SIGN NOTES

(A) FACILITY NAME EMBOSSED LETTERING 6" IN HEIGHT, NAME AND SPELLING TO BE APPROVED BY EMWD

(B) DISTRICT NAME EMBOSSED LETTERING 4" IN HEIGHT

△1 (C) ADDRESS STREET NUMBER ONLY; TO BE CONFIRMED DURING DESIGN BY LOCAL JURISDICTION. ADDRESS EMBOSSED LETTERING 4" IN HEIGHT

(D) 8" THICK REINFORCED CONCRETE (3,000 PSI) MONUMENT SIGN WALL PER DETAIL HEREON

(E) EMBOSSED LETTERING DEPTH SHALL BE 1" MIN, 2" MAX.

(F) DOUBLE SPIT CAP TO MATCH EXISTING OR PROPOSED WALL, OR IF NONE AS APPROVED BY THE DISTRICT

(G) SMOOTH FINISH, TYP.

(H) 1" LIGHTING CONDUIT (COORDINATE LOCATION WITH DISTRICT)

(I) TWO GROUND MOUNTED LIGHTS WITH JUNCTION BOX

REVISIONS

NO.	DATE	INITIAL	DESCRIPTION	APP'D	DATE
△1	3/6/15	GS	REVISED DEMENTIONS AND NOTE C	AGA	5/15/15

APPROVALS

	INITIAL	DATE
DESIGN	GK	11/07/14
MAINTENANCE	MJ	11/12/14
INSPECTION	CD	11/10/14
OPERATIONS		
SUBMITTED		

EASTERN MUNICIPAL WATER DISTRICT

EASTERN MUNICIPAL WATER DISTRICT
STANDARD DRAWING

EMWD FACILITY MONUMENT SIGN

REFERENCES:

SCALE: NONE

FILE I.D.: \kauai\eng\stddrwgs\B-987.dgn

DRAWN BY: GS

RECOMMENDED Joe Mouawad 11/13/2014
DIRECTOR OF ENGINEERING DATE

APPROVED Charlie Bachmann 11/13/2014
ASSISTANT GENERAL MANAGER DATE

B-987

△1

NOTES

1. RISER CAP, METER BOX/VAULT, AND LIDS TO BE PAINTED PER EMWD SPECIFICATIONS.
2. ALL 2" PIPE AND FITTINGS SHALL:
   A. BE MADE OF BRASS OR BRONZE;
   B. BE OF THE BANDED PATTERN;
   C. BE DESIGNED FOR A MIN OF 175 PSI (COLD) WATER WORKING PRESSURE.
3. PRESSURE TEST PER EMWD SPECIFICATIONS.
4. ALL BARE IRON AND STEEL SHALL BE COATED WITH CEMENT MORTAR AS PER THE FIELD ENGINEER.
5. VALVES AND OTHER APPURTENANCES AND FITTINGS AT THE PIPELINE SHALL BE PRIMED, AND WRAPPED WITH PROTECTO-WRAP NO. 200 OR 300 TAR RESIN TAPE. BOLTS AND NUTS SHALL BE PROTECTED USING ZINC CAPS ANODES IN ACCORDANCE WITH SECTION \ 15089.
6. SERVICE LATERAL SHALL BE INSTALLED WITH IDENTIFICATION TAPE AND LOCATOR \ WIRE PER EMWD SPECIFICATIONS.
7. ALL SERVICE PIPE AND TUBING SHALL BE LAID ON A POSITIVE SLOPE UP FROM THE WATER MAIN TO THE METER. NO DIPS OR POCKETS IN THE LINE WILL BE PERMITTED.
8. THREAD NOTATION THUS:
   IP = IRON PIPE THREAD;
   CS = CORPORATION STOP (MUELLER) THREAD;
   PJ = PACK JOINT
   CTS = COPPER TUBE SIZE
   CTS A.S. = COPPER TUBE SIZE ANGLE STOP
9. VALVE BOX SHALL BE EMWD APPROVED 8" DIA x 10" DEEP, COMPLETE WITH COVER AND ONE (1) - 6" EXTENSION.
10. SPACER ASSEMBLY SHALL NOT HAVE THE ABILITY TO CONVEY FLUIDS, SHALL BE AFIXED AND NON - ADJUSTABLE. (NO SPOOLS ALLOWED) SPACER ASSEMBLY LENGTH PER METER MANUFACTURES SPECIFICATION.
11. WHEN METER IS FURNISHED BY OTHERS, ANGLE METER STOP SHALL BE LOCKED CLOSED WITH LEAD SEAL AND THREE-STRAND SEALING WIRE.
12. METER DIMENSIONS MAY VARY, METER INSTALLATION SHALL BE PER METER MANUFACTURER SPECIFICATIONS AND EMWD STANDARDS AND SPECIFICATIONS. USE APPLICABLE EMWD METER STANDARD DRAWING FOR METER AND METER BOX/VAULT INSTALLATION.
13. ALL MATERIALS SHALL BE PER EMWD APPROVED MATERIALS LIST.
14. RESTRAIN OR WELD ALL JOINTS PER EMWD SPECIFICATIONS.
15. METER BOX/VAULT TO BE INSTALLED DURING CONSTRUCTION OF WATER SERVICE/ MAINLINE CONSTRUCTION.
16. TEST PORT (COUPLING & PLUG) SHALL BE 2" (IP) FOR 6" & SMALLER METERS, 4" (IP) FOR 8" METER, & 6" (IP) FOR 12" & LARGER METERS
17. DEPTH OF METER SHALL BE 5 FT. MAX. FROM VAULT LID TO TOP OF METER.
18. PROVIDE A MINIMUM 4" CLEARANCE BETWEEN PIPE AND KNOCKOUT HOLE WITH A MINIMUM OF 6" CLEARANCE ABOVE THE VAULT FLOOR.
19. BASE IS INCLUDED WITH VAULT.
20. READ HOLES ARE TO BE POSITIONED OVER METER REGISTER PER B-976.
21. SYSTEMS WITH ONSITE PUMPS SHALL NOT EXCEED 5 FPS VELOCITY WITHIN THE SERVICE LATERAL. SYSTEMS WITHOUT PUMPS, SHALL NOT EXCEED 10 FPS.

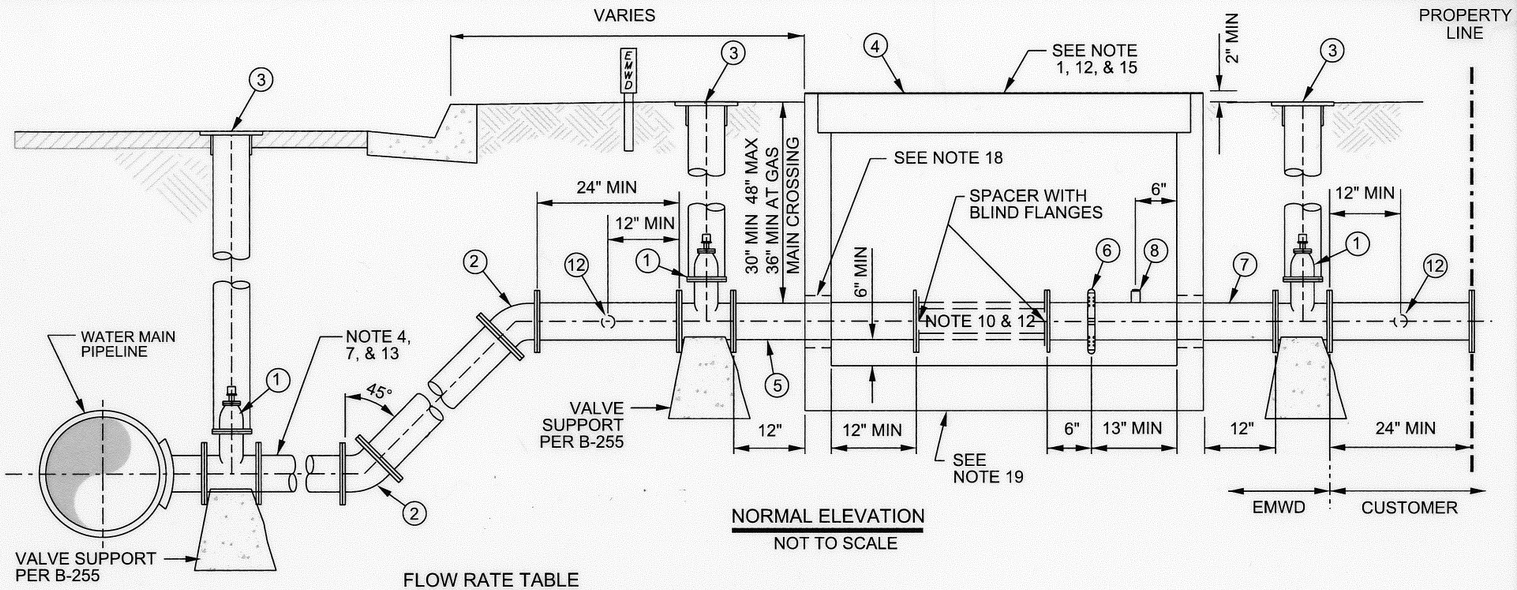

NORMAL ELEVATION
NOT TO SCALE

MATERIALS LIST

1. RESILIENT SEAT GATE VALVE PER APPLICABLE METER BOX DETAIL .
2. 45° DEG. ELBOW (IF REQUIRED)
3. RISER AND CAP DETAIL PER EMWD B-668
4. METER VAULT PER METER STANDARD DRAWING & EMWD APPROVED MATERIAL LIST
5. 24" FLANGED SPOOL, SIZE PER APPLICABLE METER DETAIL
6. VICTAULIC COUPLING
7. 30" FLANGED SPOOL WITH VICTAULIC COUPLING & TEST PORT, SIZE PER APPLICABLE METER DETAIL
8. (IP) COUPLING & PLUG (SEE NOTE 16)
9. PIPE (SEE NOTE 13)
10. 90° ELBOW
11. 4" X 2" COMPANION FLANGE
12. METER BYPASS CONNECTION (REFER TO THE APPROPRIATE METER STANDARD DRAWING FOR METER INSTALLATION SPECIFICATIONS)

FLOW RATE TABLE

FUTURE METER SIZE	FLOW RATE (GPM)	EMWD STD DWG	LATERAL SIZE	VELOCITY (FT/S)	METER LENGTH
1½" OMNI R2	150	B-342	4"	3.18	13"
2" MASTER	120	B-344	4"	2.5	17"
2" OMNI C2	160	B-344	4"	3.3	15¼"
2" OMNI R2	200	B-344	4"	4.2	17"
3" OMNI C2	400	B-633	4"	8.4	17"
3" OMNI T2	500	B-633	4"	10.6	19"
3" OMNI C2	400	B-633	6"	4.1	17"
3" OMNI T2	500	B-633	6"	5.1	19"
4" OMNI C2	800	B-634	6"	8.2	20"
4" OMNI T2	1000	B-634	6"	10.2	23"
4" OMNI C2	800	B-634	8"	4.7	20"
4" OMNI T2	1000	B-634	8"	5.9	23"
6" OMNI C2	1600	B-635	8"	9.5	24"
6" OMNI C2	1600	B-635	12"	4.5	24"
6" OMNI T2	2000	B-635	12"	5.6	27"
8" OMNI C2	2700	B-636	12"	7.5	30⅛"
8" OMNI T2	3500	B-636	12"	9.8	30⅛"
8" OMNI C2	2700	B-636	18"	3.4	30⅛"
8" OMNI T2	3500	B-636	18"	4.5	30⅛"

4" WATER SERVICE CONNECTION 2" METER
NOT TO SCALE

REVISIONS					
NO.	DATE	INITIAL	DESCRIPTION	APP'D	DATE

APPROVALS		
	INITIAL	DATE
DESIGN	GS	5/15/15
CONSTRUCTION		
INSPECTION	BAM	05/21/2015
OPERATIONS	K.G.	5/21/15
SUBMITTED	AGA	5/15/15

EASTERN MUNICIPAL WATER DISTRICT

EASTERN MUNICIPAL WATER DISTRICT

EASTERN MUNICIPAL WATER DISTRICT
STANDARD DRAWING

4" & LARGER SERVICE CONNECTION

REFERENCES:

FILE I.D.: \kauai\eng\std dwg\B-993.dgn

SCALE:

DRAWN BY: GS

RECOMMENDED _____ 5/18/15
SENIOR DIRECTOR OF ENGINEERING — DATE

APPROVED _____ 5/27/15
ASSISTANT GENERAL MANAGER — DATE

B-993

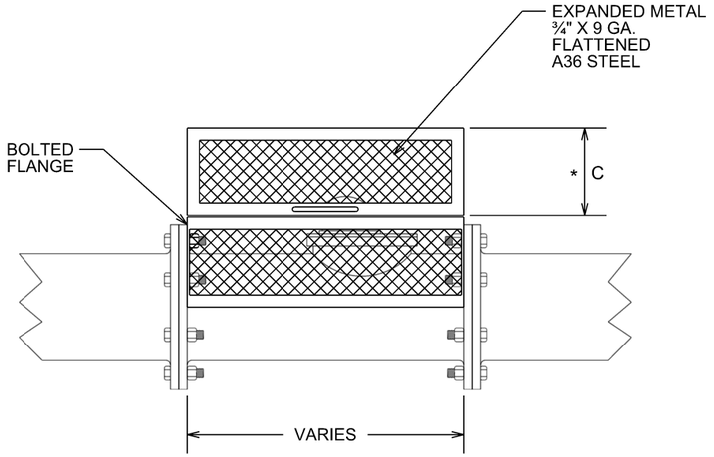

FRONT VIEW
NTS

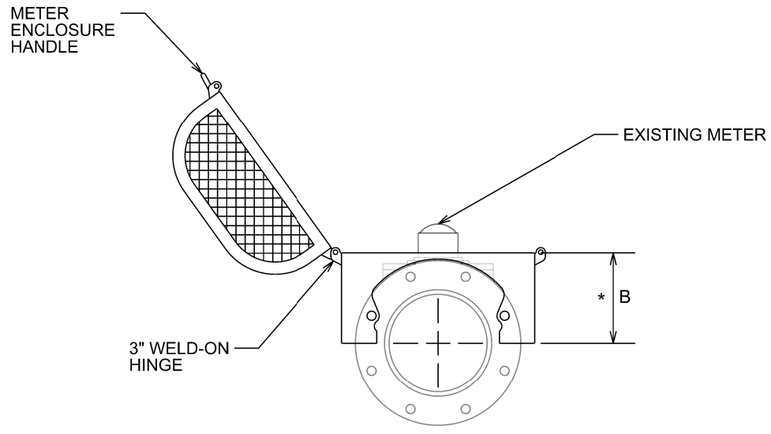

SIDE VIEW-OPEN CAGE
NTS

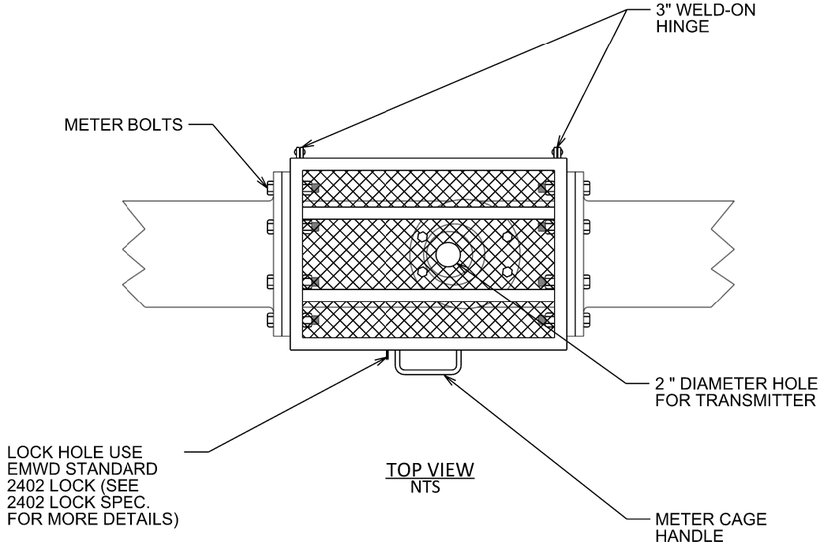

TOP VIEW
NTS

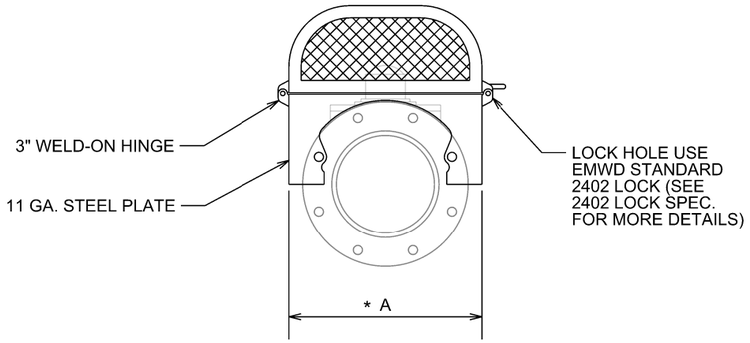

SIDE VIEW-CLOSED CAGE
NTS

GENERAL NOTES

1. 5 INCH MINIMUM CLEARANCE SHALL BE MAINTAINED BETWEEN METER AND TOP OF CAGE. ALL DIMENSIONS ARE TO BE DETERMINED BASED ON METER SPECIFICATIONS.
2. METER FLANGE BOLTS SHALL BE USED TO MOUNT ENCLOSURE.
3. THICKNESS OF FRAME: 1" X 1" X ⅛" ANGLE IRON.
4. EXPANDED METAL ¾" X 9 DIAMOND GAUGE MESH FOR FENCING. THERE SHALL BE NO EXPOSED ENDS OF EXPANDED METAL ON THE OUTSIDE OF THE ENCLOSURE.
5. LOCK HOLE SHALL FIT AN EMWD STANDARD 2402 LOCK.
6. NYLON LOCKING NUTS SHALL BE INSTALLED ON THE ENCLOSURES FOUR MOUNTING POINTS.

MATERIALS LIST	
QTY	DESCRIPTION
2	3" WELD ON HINGE
4	NYLON LOCKING NUTS
1	2402 LOCK
1	METER ENCLOSURE HANDLE
TBD	BOLTS
TBD	1" X 1" X ⅛" ANGLE IRON
TBD	EXPANDED METAL ¾" X 9 GA. FLATTENED A36 STEEL
2	11 GA. STEEL END PLATES

* IT IS THE RESPONSIBILITY OF THE CONTRACTOR TO VERIFIED THE SPECIFIC METER DIMENSIONS.

DIMENSION			
DIAMETER OF METER	A	B	C
1"	6"	3"	TO BE DETERMINED BASED ON METER DIAMETER AND HEIGHT. 5 INCH CLEARANCE FROM TOP OF METER TO TOP OF CAGE.
2"	8"	4"	
3"	10"	5"	
4"	12"	6"	
6"	14"	6"	
8"	16"	8"	

REVISIONS					
NO.	DATE	INITIAL	DESCRIPTION	APP'D	DATE

APPROVALS		
	INITIAL	DATE
DESIGN	IA	10/10/16
CONSTRUCTION		
INSPECTION	BAM	12/15/16
OPERATIONS	KG	12/15/16
SUBMITTED	ES	12/15/16

emwd EASTERN MUNICIPAL WATER DISTRICT

EASTERN MUNICIPAL WATER DISTRICT
STANDARD DRAWING

METER CAGE - FLANGE MOUNT

REFERENCES:

FILE I.D.: \kauai\eng\std dwgs\B-994.dgn

SCALE: NONE

DRAWN BY: IA

RECOMMENDED Joe Mouawad 12/16/16
DIRECTOR OF ENGINEERING DATE

APPROVED Charlie Bachmann 12/19/16
ASST. GENERAL MANAGER OF ENGINEERING DATE

B-994